LONG SEAMS

COURSE	ORIENTATION	ORIENTATION
1(TOP)	115°	295°
2	110°	290°
3	115°	295°
4	110°	290°
5	115°	295°
6	110°	290°

SEE SHEET #6 FOR CLIP DETAILS.
SEE SHEET #4, #5 FOR NOZZLE DETAILS

*VERT – TOP TO BOTTOM

Ship loose items:
(2 pcs.) Swing gate (A71-24PC)
(2 pcs.) Caged ladders (Anti-slip rungs) w/ hardware
(Hardware material - SS304)
(2 pcs.) Top handrails w/ hardware
(Hardware material - SS304)
(1 pc.) Rest platform w/ (4) Brace angles and hardware
(Hardware material - SS304)
(2 pcs.) Rest platform handrail w/ hardware
(Hardware material - SS304)
(2 sets) Spare bolts, nuts & gaskets
for N11, MH1 & MH2

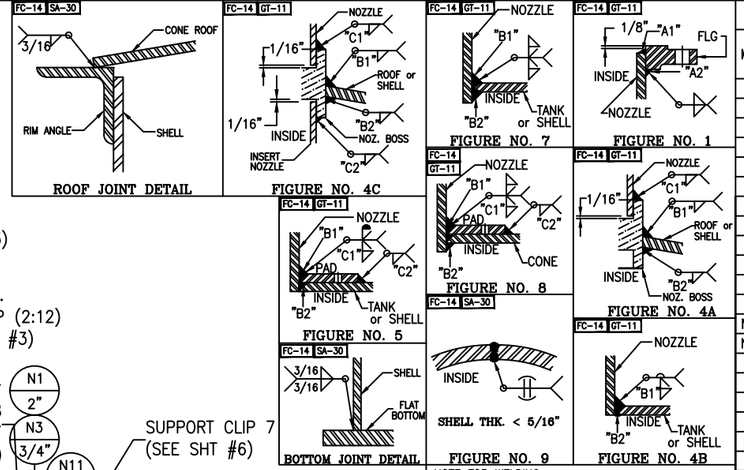

NOTE FOR WELDING:
REFER TO FOLLOWING WPS NO. & DOCUMENT
WPS ST-FC-14: FCAW (SEMI-AUTOMATIC)
WPS ST-GT-11: GTAW (MANUAL)
WPS ST-SA-30: SAW (MACHINE)

NOZZLE SCHEDULE

MARK	SERVICE	SIZE	RATING	TYPE / STYLE	NECK SCHED.	PROJECTION EXT. (E)	PROJECTION INT. (MIN.)	WELD FIGURE	REPAD SIZE (THK X OD)	WELD SIZE "A1"	"A2"	"B1"	"B2"	"C1"	"C2"
N1	LIQUID INLET	2"	150#	RFSO	80S	SEE DWG	SEE DWG	1,8	1/4" X 7" OD	3/16	3/16	1/4	1/8	1/4	1/4
N2	LIQUID INLET	3"	150#	RFSO	40S	SEE DWG	SEE DWG	1,8	1/4" X 9" OD	3/16	3/16	1/4	1/8	1/4	1/4
N3	LIQUID INLET	3/4"	150#	RFSO W/BOSS	80S	SEE DWG	SEE DWG	1,4C	–	1/8	1/8	1/4	1/8	3/16	3/16
N4	LIQUID OUTLET	3"	150#	RFSO W/ELBOW	40S	6"	SEE DWG	1,8	3/16" X 7 1/2" OD	3/16	3/16	1/4	1/4	3/16	3/16
N5	LI	2"	150#	RFSO	80S	6"	1"	1,7	–	3/16	3/16	1/4	1/8	–	–
N6	TG	1"	150#	RFSO W/BOSS	80S	6"	–	1,4A	–	3/16	3/16	1/4	1/8	3/16	–
N7A	LT	2"	150#	RFSO	80S	6"	1"	1,7	–	3/16	3/16	1/4	1/8	–	–
N7B	LT	2"	150#	RFSO	80S	6"	1"	1,7	–	3/16	3/16	1/4	1/8	–	–
N8A	LG1	3/4"	150#	RFSO W/BOSS	80S	6"	–	1,4A	–	1/8	1/8	1/4	1/8	3/16	–
N8B	LG1	3/4"	150#	RFSO W/BOSS	80S	6"	–	1,4A	–	1/8	1/8	1/4	1/8	3/16	–
N9A	LG2	3/4"	150#	RFSO W/BOSS	80S	6"	–	1,4A	–	1/8	1/8	1/4	1/8	3/16	–
N9B	LG2	3/4"	150#	RFSO W/BOSS	80S	6"	–	1,4A	–	1/8	1/8	1/4	1/8	3/16	–
N10A	LG3	3/4"	150#	RFSO W/BOSS	80S	6"	–	1,4A	–	1/8	1/8	1/4	1/8	3/16	–
N10B	LG3	3/4"	150#	RFSO W/BOSS	80S	6"	–	1,4A	–	1/8	1/8	1/4	1/8	3/16	–
N11	SPARE	2"	150#	RFSO W/BLIND	80S	SEE DWG	1"	1,8	1/4" X 7" OD	3/16	3/16	1/4	1/8	1/4	1/4
N12	NI INLET	3/4"	150#	RFSO W/BOSS	80S	SEE DWG	–	1,4A	–	1/8	1/8	1/4	1/8	3/16	–
N13	DRAIN	2"	150#	RFSO	80S	6"	–	1,4B	–	3/16	3/16	1/4	1/8	–	–
N14	VENT	2"	150#	RFSO	80S	SEE DWG	–	1,5	1/4" X 7" OD	3/16	3/16	1/4	1/8	–	–
MH1	ROOF MANWAY	24"	150#	RFSO W/DAVIT	1/4"	SEE DWG	1"	1,8	1/4" X 46" OD	1/4	1/4	1/4	1/8	1/4	3/16
MH2	SHELL MANWAY	24"	150#	RFSO W/DAVIT	1/4"	8"	1"	1,8	3/16" X 32" OD	1/4	1/4	3/16	3/16	3/16	3/16

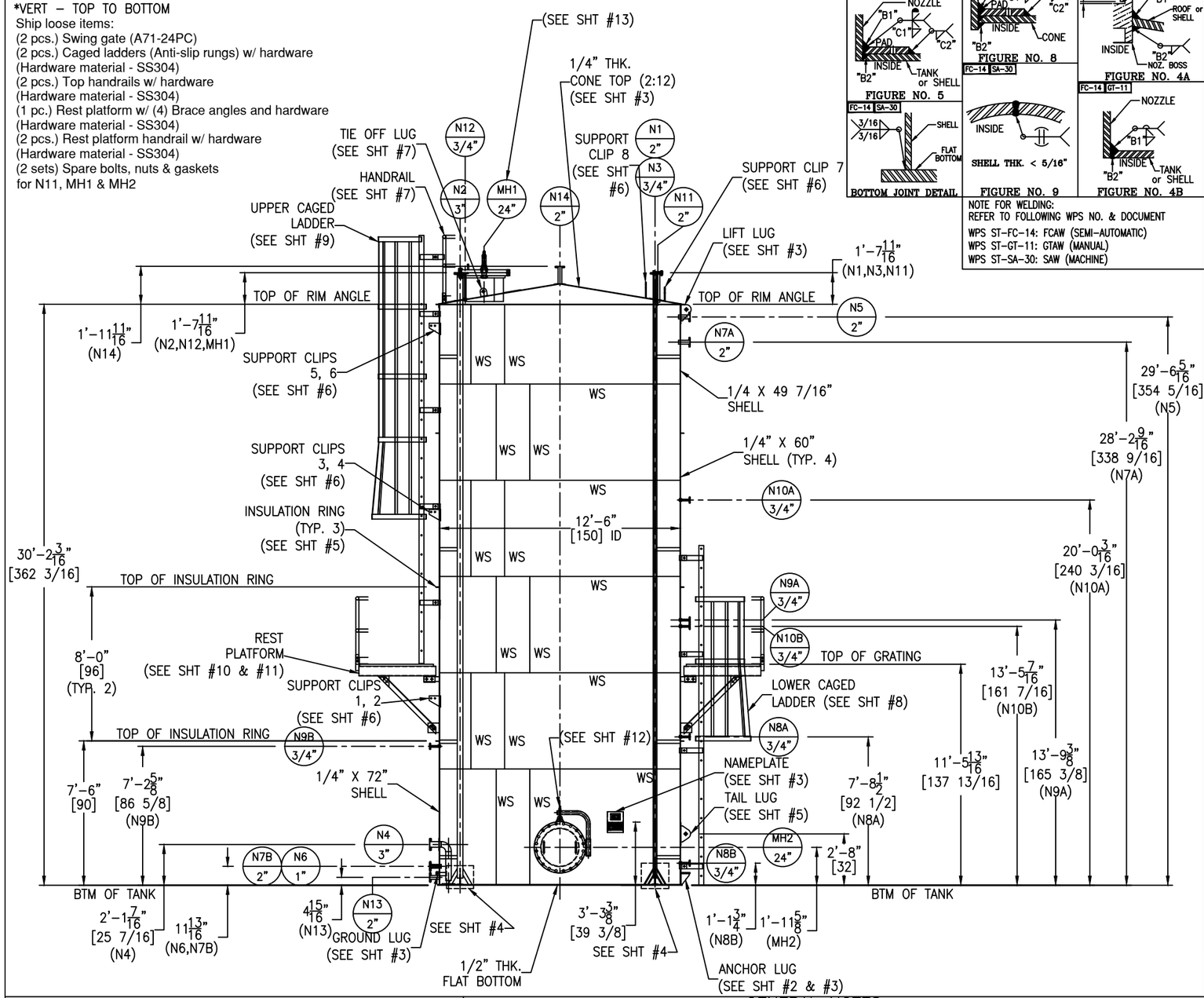

MATERIALS OF CONSTRUCTION

	VESSEL
SHELL	SA240-304/304L
TOP CONE/FLAT BOTTOM	SA240-304/304L
RIM ANGLE	SA479-304/304L
NOZZLE NECKS	SA312-304/304L WLD & SA403-304/304L WPW
NOZZLE FLANGES	SA182F-304/304L
MANWAY NECKS	SA240-304/304L
MANWAY FLANGES	SA182F-304/304L
GASKETS	GYLON PTFE (RG-TFE-G3510)
BOLTS/STUDS	SA193-B8
NUTS	SA194-8
STRUCTURAL BOLTS	SA193-B8 (SS304)
NUTS	SA194-8 (SS304)
REPADS	SA240-304/304L
DIPTUBE SUPPORT BRACKET	SA240-304/304L & SA479-304/304L
SUPPORTS/HOLD DOWNS	SA240-304/304L
LIFTING LUGS	SA240-304/304L
VACUUM RINGS	–
INSULATION RINGS	SA240-304/304L
GROUND LUG	SA240-304/304L
BAFFLE	–
LADDER	SA36
TANK CLIPS (LADDER)	SA240-304/304L
HANDRAIL	SA500
HANDRAIL POST CLIPS	SA479-304/304L
PLATFORM	SA36
PLATFORM CLIPS	SA36
DIPTUBE SUPPORT	SA240-304/304L
JACKET NOZZLE NECKS	–
JACKET NOZZLE FLANGES	–

DESIGN DATA

	VESSEL
DESIGN AND FAB. CODE	API650
CERT. STAMP REQ'D.	NO
DESIGN PRESSURE	FULL WATER + 500mmAq
DESIGN TEMPERATURE	140° F
MIN. DESIGN METAL TEMP.	-20° F @ FULL WATER + 500MMAq
OPERATING PRESSURE	ATM
OPERATING TEMPERATURE	113° F
JOINT EFFICIENCY HEADS	0.7
JOINT EFFICIENCY SHELL	0.7
CORROSION ALLOWANCE	0"
SPECIFIC GRAVITY	1.014
EARTHQUAKE ZONE	Ss = (0.074) S1 = (0.045)
WIND LOAD	115 MPH
STRESS RELIEF	NOT REQ'D
RADIOGRAPHIC EXAM	NOT REQ'D
DYE PENETRANT EXAM	SEE NOTE 7
MAGNETIC PARTICLE EXAM	NOT REQ'D
HYDROSTATIC TEST	SEE NOTE 9
PNEUMATIC TEST	–
JKT DESIGN AND FAB. CODE	–
JKT CERT. STAMP REQ'D.	–
JKT DESIGN PRESSURE	–
JKT DESIGN TEMPERATURE	–
JKT MIN. DESIGN METAL TEMP.	–
JKT OPERATING PRESSURE	–
JKT OPERATING TEMPERATURE	–
JKT JOINT EFFICIENCY HEADS	–
JKT JOINT EFFICIENCY SHELL	–
JKT HYDRO TEST	–

VESSEL FINISH

INTERIOR WELD TREATMENT:	SAV TANK STANDARD
EXTERIOR WELD TREATMENT:	SAV TANK STANDARD
SAV TANK FINISHING STANDARD:	SEE NOTE 6
INSULATION:	2" BY OTHERS
PAINTING:	SEE NOTE 8

VESSEL CAPACITY AND WEIGHTS

OPERATING CAPACITY	–
FULL CAPACITY	28,000 GAL.
EMPTY SHIPPING WEIGHT W/O ACCESSORIES	21,000 LBS.
WEIGHT FULL OF WATER	257,100 LBS.
WEIGHT FULL OF PRODUCT	260,400 LBS.
WEIGHT FULL OF ACCESSORIES	2,400 LBS.

QUALITY CONTROL

ENG. _____ DATE: _____

Q.C. _____ DATE: _____

This drawing is issued for customer approval. please review, make approval changes (if any) in red. check the appropriate box, sign & date.

- ☐ Approval – no changes. Please proceed with fabrication.
- ☐ Approved as noted. Please proceed with fabrication
- ☐ Not approved. Please make changes and resubmit.

Customer signature _____ Date _____

GENERAL NOTES

1.) COVER ALL FLANGES, OPENINGS & MACHINED SURFACES PRIOR TO SHIPMENT UNLESS OTHERWISE NOTED.
2.) BOLT HOLES TO STRADDLE 0° & 180° UNLESS OTHERWISE NOTED.
3.) NOZZLE REPADS TO HAVE (1) ø1/4" NPT TELL-TALE VENT HOLES ON HORIZONTAL CENTER LINE. PLUG WEEP HOLES (THREADED) WITH SS304 PLUGS.
ALL OTHER REPADS TO HAVE (1) ø1/4" NPT WEEP HOLE AT LOWEST POINT ON PAD. PLUG WEEP HOLES (THREADED) WITH SS304 PLUGS.
4.) MANUFACTURING TOLERANCE TO BE IN ACCORDANCE WITH API STANDARD 650 7.5
5.) ASME MATERIALS TO CONFORM TO THE FOLLOWING: FLANGES – B16.5, FITTINGS – B16.9 & COUPLINGS/BOSS – B16.11.
6.) PICKLE ALL EXTERIOR WELDS. PASSIVATE INTERIOR & EXTERIOR OF VESSEL.
7.) DYE PEN – SHELL TO BOTTOM SEAM & ALL SHELL NOZZLES.
8.) PAINTING – HANDRAILS, LADDERS, REST PLATFORM & GRATING TO BE PAINTED (1) COAT OSHA YELLOW (5–7 MILS).
9.) HYDRO: FULL OF WATER FOR SHELL HEIGHT + 500mmAq

REVISIONS

REV	D.BY	C.BY	DATE	DESCRIPTION
				AS BUILT
4	RS	–	8/14/25	CERTIFIED
3	AD	RS	8/6/25	APPROVAL REV 3
2	AD	RS	7/10/25	APPROVAL REV 2
1	AD	RS	5/9/25	APPROVAL REV 1
0	AD	RS	8/29/24	APPROVAL

Savannah Tank & Equipment Corp.
1517 Telfair Road, Savannah, GA 31415
(912) 233-8902

DRAWN BY: AD
CHK'D BY: RS
APPROVED BY: NP
SCALE: 1/4" = 1'-0"

SYMS ENGINEERING
NMP STORAGE TANK
EQUIP. #TK-F502R
CUST. PO #MCD020813KE01

ELEVATION VIEW

DRAWING NO.: 046-24-1 SHT 1 OF 14 REV. SET 4

LONG SEAMS

COURSE	ORIENTATION	ORIENTATION
1(TOP)	115°	295°
2	110°	290°
3	115°	295°
4	110°	290°
5	115°	295°
6	110°	290°

*VERT – TOP TO BOTTOM

SEE SHEET #6 FOR CLIP DETAILS.
SEE SHEET #4, #5 FOR NOZZLE DETAILS

Ship loose items:
(2 pcs.) Swing gate (A71-24PC)
(2 pcs.) Caged ladders (Anti-slip rungs) w/ hardware
(Hardware material - SS304)
(2 pcs.) Top handrails w/ hardware
(Hardware material - SS304)
(1 pc.) Rest platform w/ (4) Brace angles and hardware
(Hardware material - SS304)
(2 pcs.) Rest platform handrail w/ hardware
(Hardware material - SS304)
(2 sets) Spare bolts, nuts & gaskets
for N11, MH1 & MH2

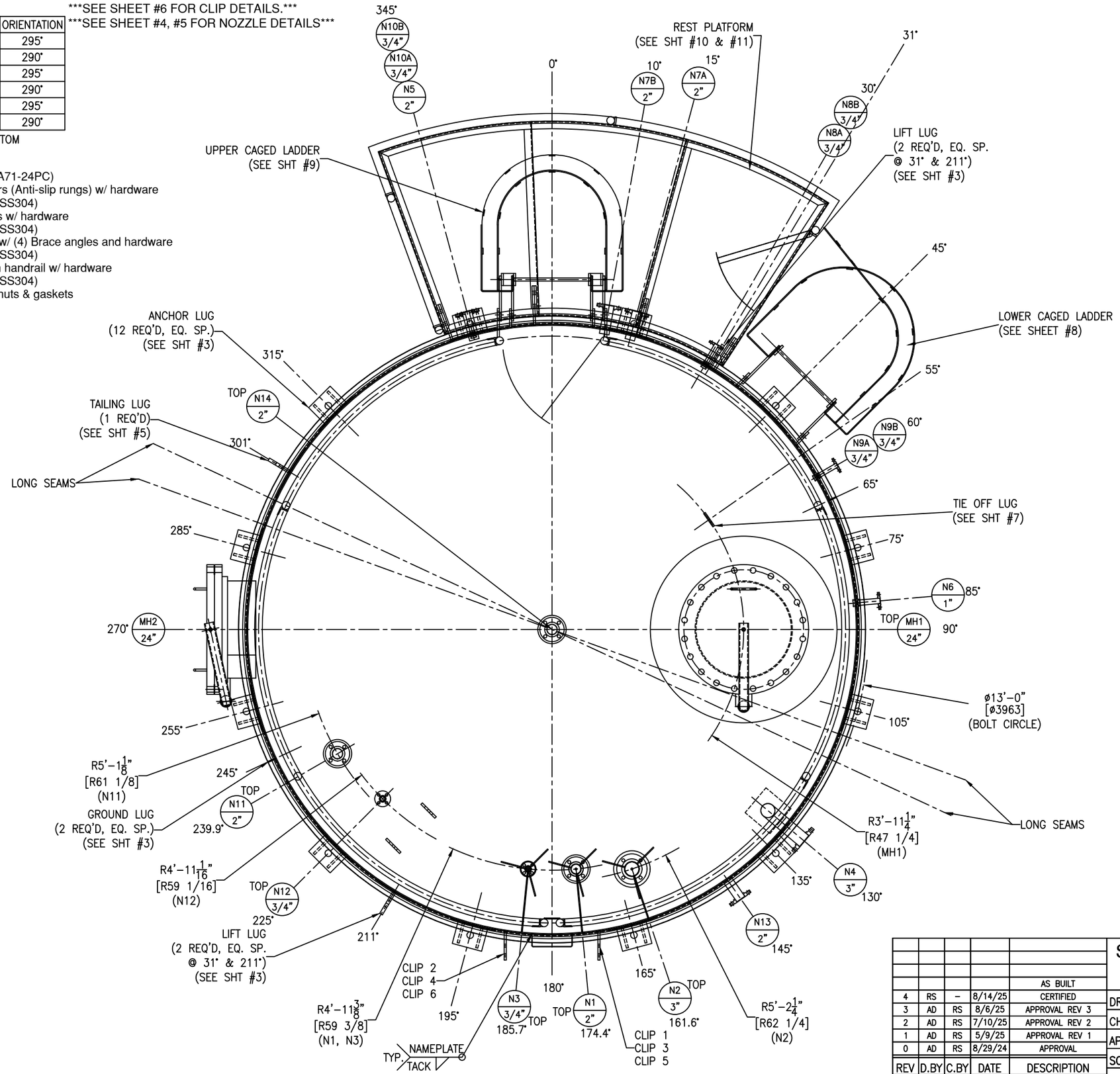

REV	D.BY	C.BY	DATE	DESCRIPTION
				AS BUILT
4	RS	–	8/14/25	CERTIFIED
3	AD	RS	8/6/25	APPROVAL REV 3
2	AD	RS	7/10/25	APPROVAL REV 2
1	AD	RS	5/9/25	APPROVAL REV 1
0	AD	RS	8/29/24	APPROVAL

⚠ REVISIONS

Savannah Tank & Equipment Corp.
1517 Telfair Road, Savannah, GA 31415
(912) 233-8902

DRAWN BY: AD
CHK'D BY: RS
APPROVED BY: NP
SCALE: 3/4" = 1'-0"

SYMS ENGINEERING
NMP STORAGE TANK
EQUIP. #TK-F502R
CUST. PO #MCD020813KE01

PLAN VIEW

DRAWING NO.: 046-24-2 SHT 2 OF 14 REV. SET 4

FC-14

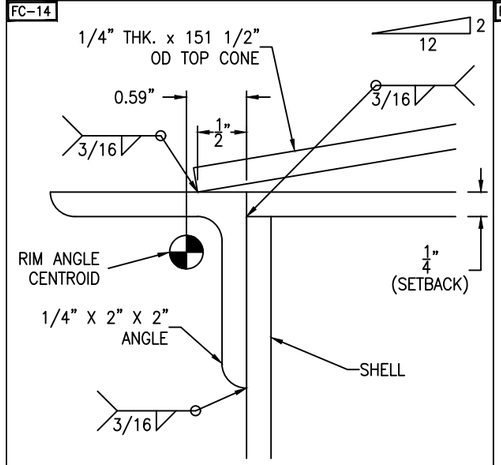

2:12 = SLOPE INCREASE 2" FOR EVERY 12"

CONICAL ROOF DETAIL

SCALE: 1'-0" = 1'-0"

FC-14

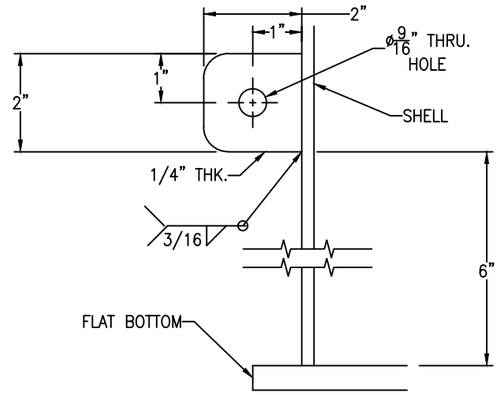

LUGS LOCATED AT 65°* & 245°

GROUND LUG DETAIL

(2 REQ'D) SCALE: 6" = 1'-0"

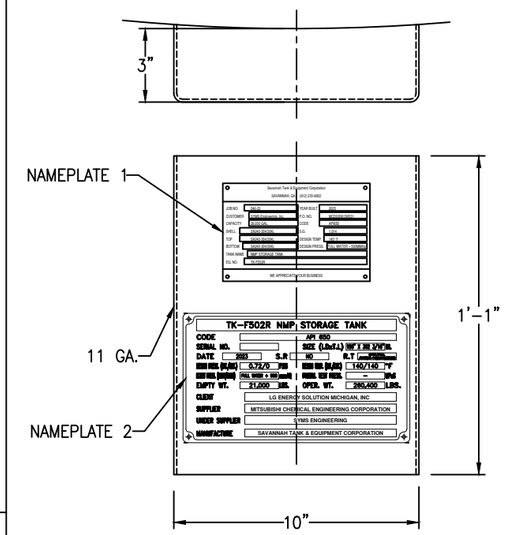

NAME PLATE BRACKET SIZE

(1 REQ'D) SCALE: 3" = 1'-0"

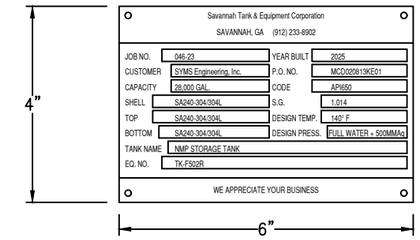

NAME PLATE 1 DETAIL

SCALE: 6" = 1'-0"

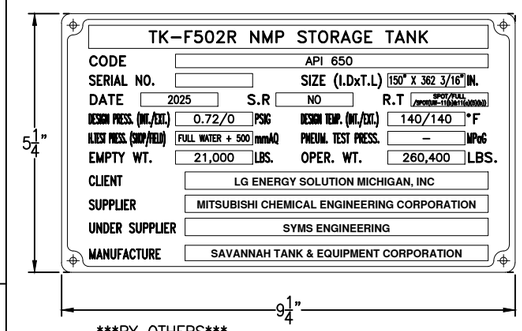

BY OTHERS

NAME PLATE 2 DETAIL

SCALE: 6" = 1'-0"

Bolting for blinds
N11: (4+4+4) 5/8"-11 NC x 2 1/2" HH BOLT
(4+4+4) 5/8"-11 NC HH NUT
(1+1+1) 2" 150# RING GASKET x 1/8"
(GYLON PTFE (RG-TFE-G3510))

REFER TO SHEET #5 NOZZLE N11 DETAIL 3

FC-14

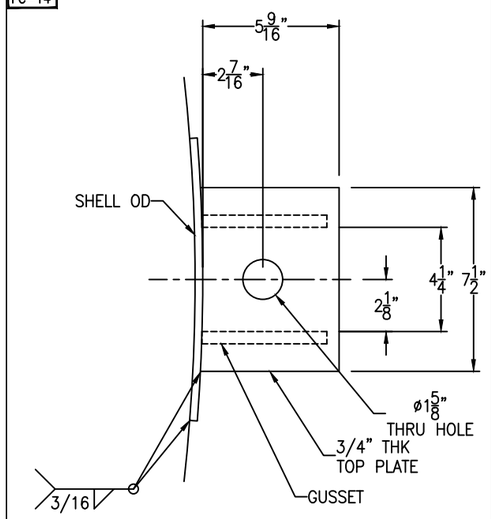

FC-14

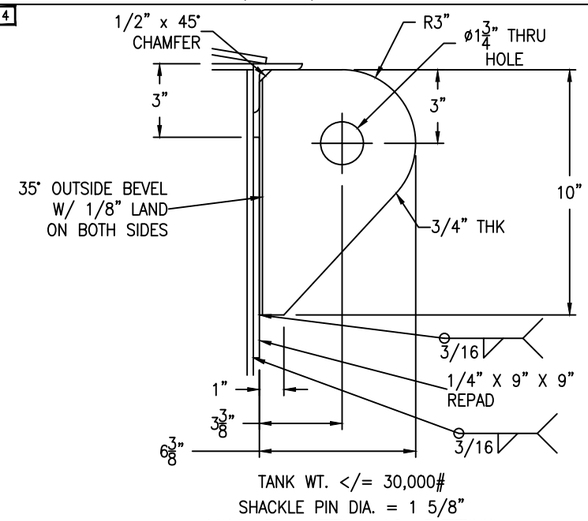

TANK WT. <= 30,000#
SHACKLE PIN DIA. = 1 5/8"

ANGLE LIFT LUG DETAIL

(2 REQ'D) SCALE: 3" = 1'-0"

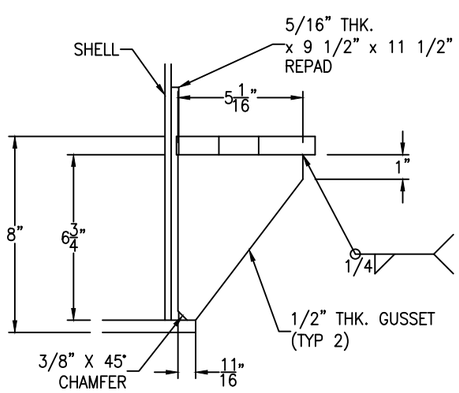

ANCHOR LUG DETAIL

(12 REQ'D) SCALE: 3" = 1'-0"

FC-14

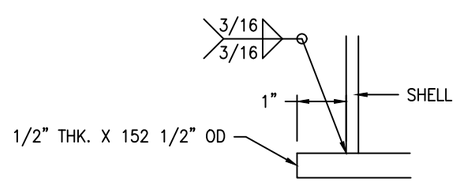

BOTTOM DETAIL

SCALE: 6" = 1'-0"

REV	D.BY	C.BY	DATE	DESCRIPTION
				AS BUILT
4	RS	–	8/14/25	CERTIFIED
3	AD	RS	8/6/25	APPROVAL REV 3
2	AD	RS	7/10/25	APPROVAL REV 2
1	AD	RS	5/9/25	APPROVAL REV 1
0	AD	RS	8/29/24	APPROVAL

1 REVISIONS

Savannah Tank & Equipment Corp.
1517 Telfair Road, Savannah, GA 31415
(912) 233-8902

DRAWN BY: AD
CHK'D BY: RS
APPROVED BY: NP
SCALE: 1/4" = 1'-0"

SYMS ENGINEERING
NMP STORAGE TANK
EQUIP. #TK-F502R
CUST. PO #MCD020813KE01

GENERAL DETAILS

DRAWING NO.: 046-24-3 SHT 3 OF 14 | REV. SET 4

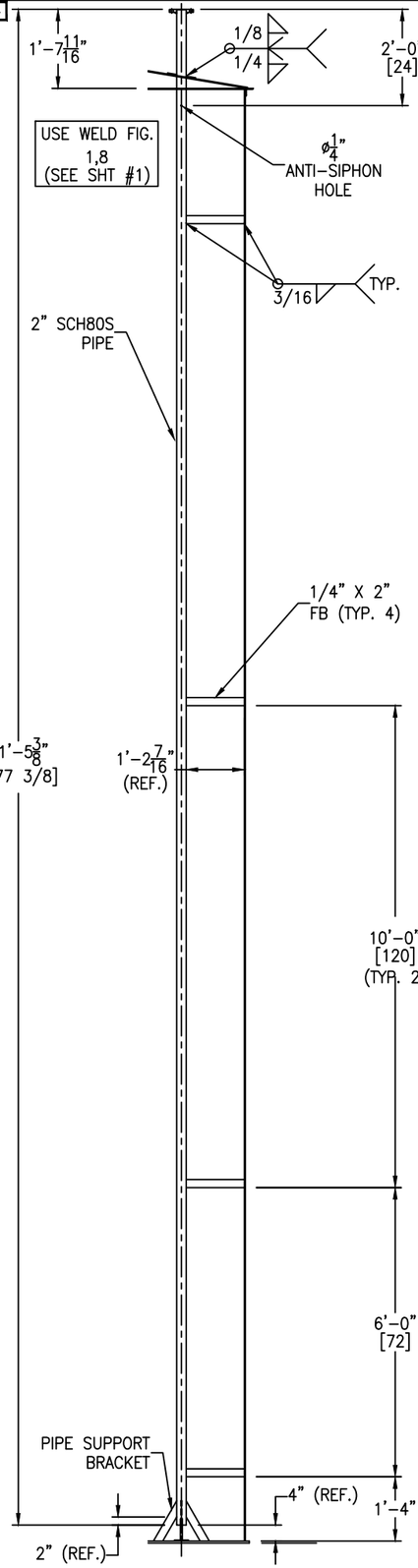

NOZZLE N1 DETAIL

SCALE: 1/2" = 1'-0"

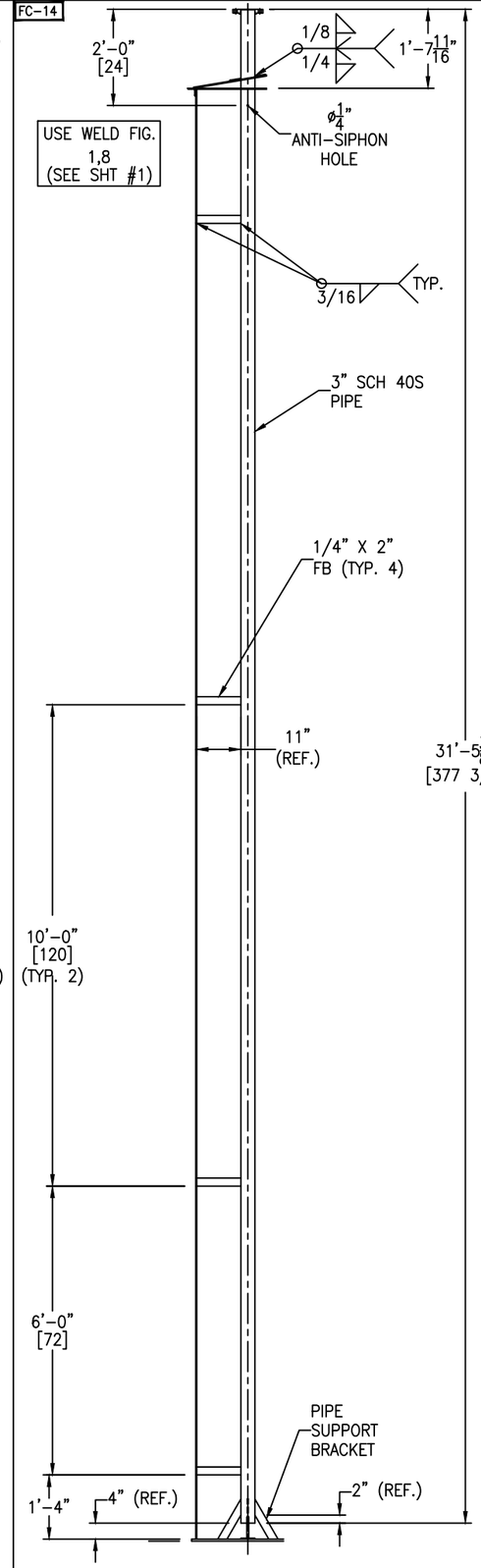

NOZZLE N2 DETAIL

SCALE: 1/2" = 1'-0"

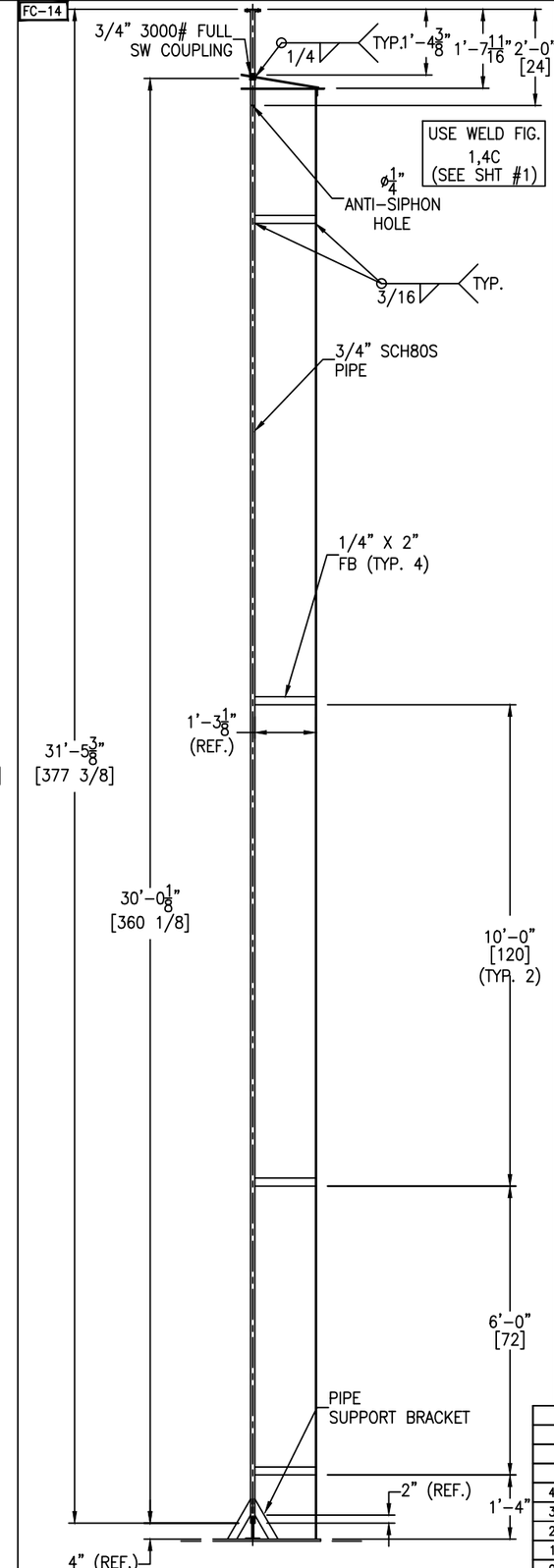

NOZZLE N3 DETAIL

SCALE: 1/2" = 1'-0"

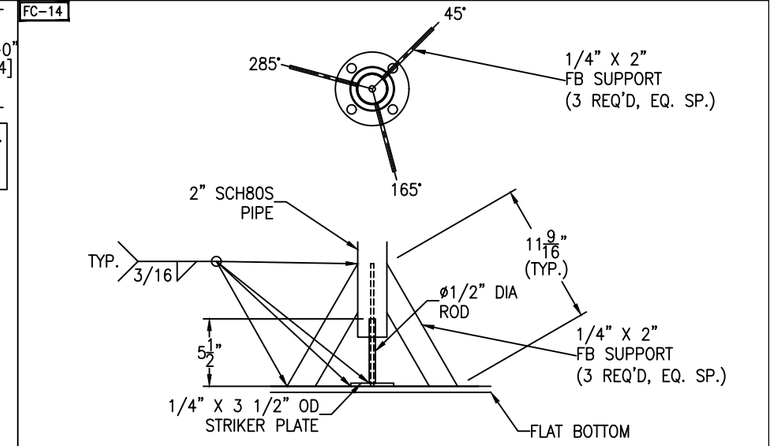

N1 PIPE SUPPORT BRACKET DETAIL

SCALE: 1 1/2" = 1'-0"

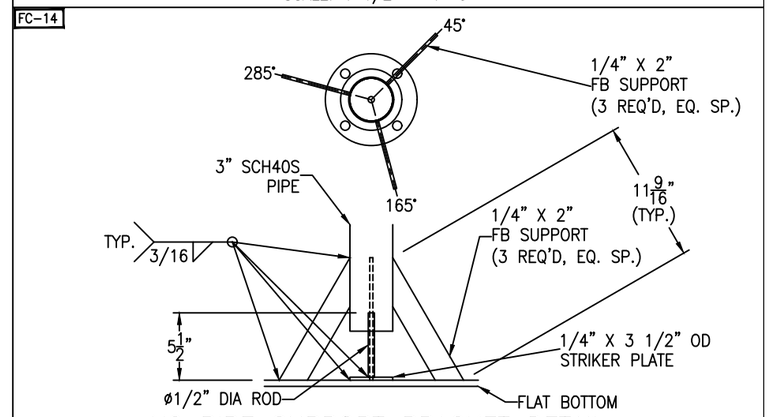

N2 PIPE SUPPORT BRACKET DETAIL

SCALE: 1 1/2" = 1'-0"

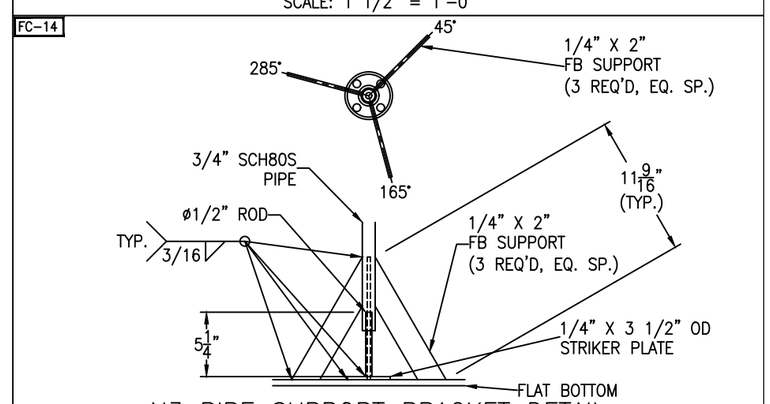

N3 PIPE SUPPORT BRACKET DETAIL

SCALE: 1 1/2" = 1'-0"

REV	D.BY	C.BY	DATE	DESCRIPTION
				AS BUILT
4	RS	–	8/14/25	CERTIFIED
3	AD	RS	8/6/25	APPROVAL REV 3
2	AD	RS	7/10/25	APPROVAL REV 2
1	AD	RS	5/9/25	APPROVAL REV 1
0	AD	RS	8/29/24	APPROVAL

⚠ REVISIONS

Savannah Tank & Equipment Corp.
1517 Telfair Road, Savannah, GA 31415
(912) 233-8902

DRAWN BY:	AD
CHK'D BY:	RS
APPROVED BY:	NP
SCALE:	1/4" = 1'-0"

SYMS ENGINEERING
NMP STORAGE TANK
EQUIP. #TK-F502R
CUST. PO #MCD020813KE01

DIP-TUBE DETAILS

DRAWING NO.: 046-24-4 SHT 4 OF 14 | REV. SET 4

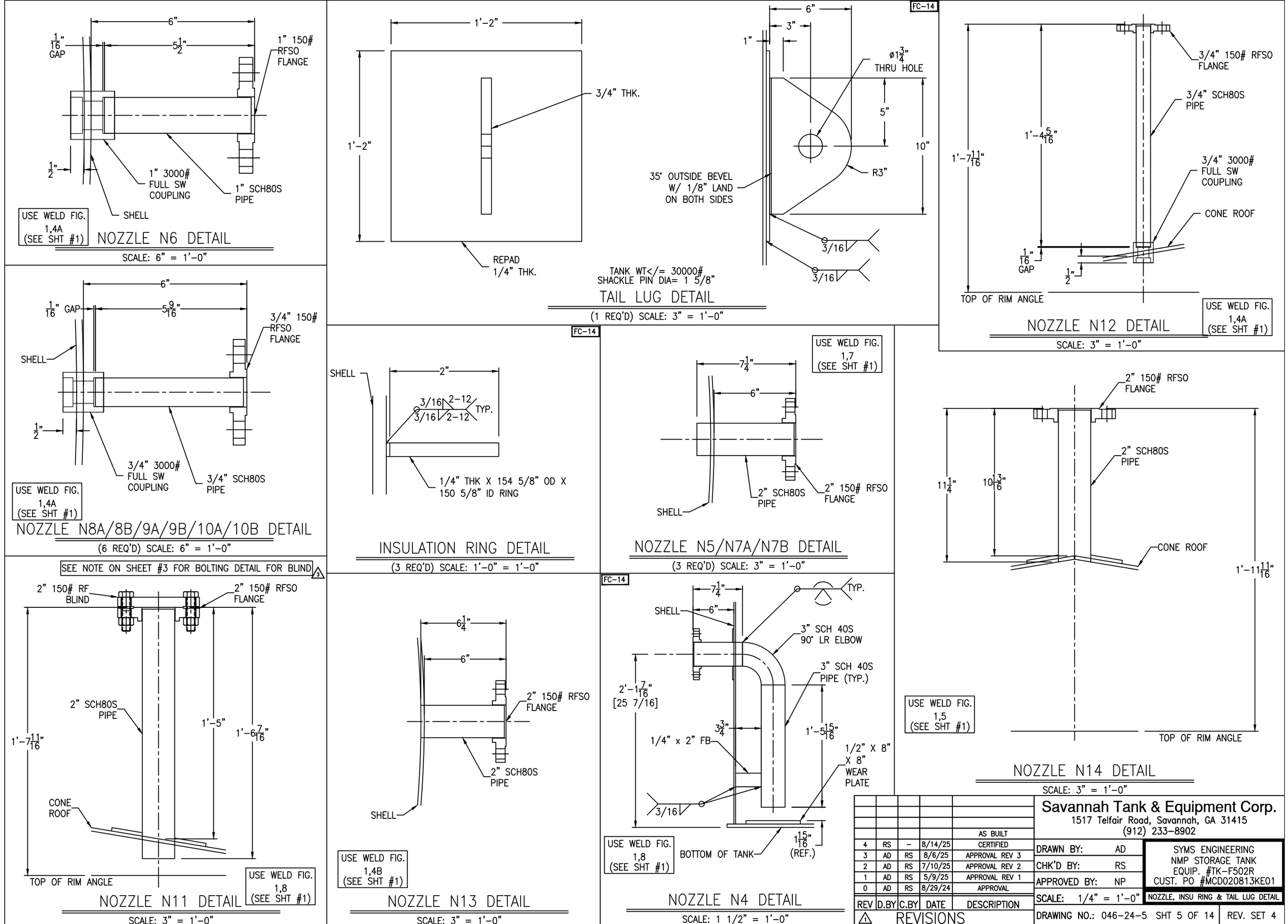

REV	D.BY	C.BY	DATE	DESCRIPTION
				AS BUILT
4	RS	–	8/14/25	CERTIFIED
3	AD	RS	8/6/25	APPROVAL REV 3
2	AD	RS	7/10/25	APPROVAL REV 2
1	AD	RS	5/9/25	APPROVAL REV 1
0	AD	RS	8/29/24	APPROVAL

REVISIONS

Savannah Tank & Equipment Corp.
1517 Telfair Road, Savannah, GA 31415
(912) 233-8902

DRAWN BY:	AD
CHK'D BY:	RS
APPROVED BY:	NP
SCALE:	1/4" = 1'-0"
DRAWING NO.:	046-24-5 SHT 5 OF 14

SYMS ENGINEERING
NMP STORAGE TANK
EQUIP. #TK-F502R
CUST. PO #MCD020813KE01

NOZZLE, INSU RING & TAIL LUG DETAIL

REV. SET 4

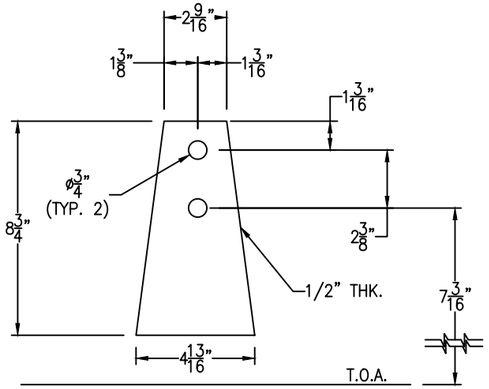

*ADJUST HEIGHT OF CLIPS DURING FABRICATION.

ROOF CLIPS DETAIL FOR CLIP 7

SCALE: 3" = 1'-0"

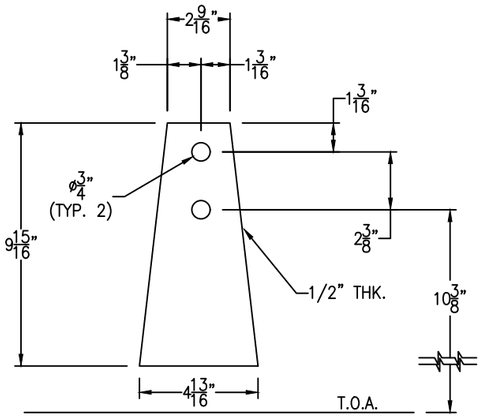

*ADJUST HEIGHT OF CLIPS DURING FABRICATION.

ROOF CLIPS DETAIL FOR CLIP 8

SCALE: 3" = 1'-0"

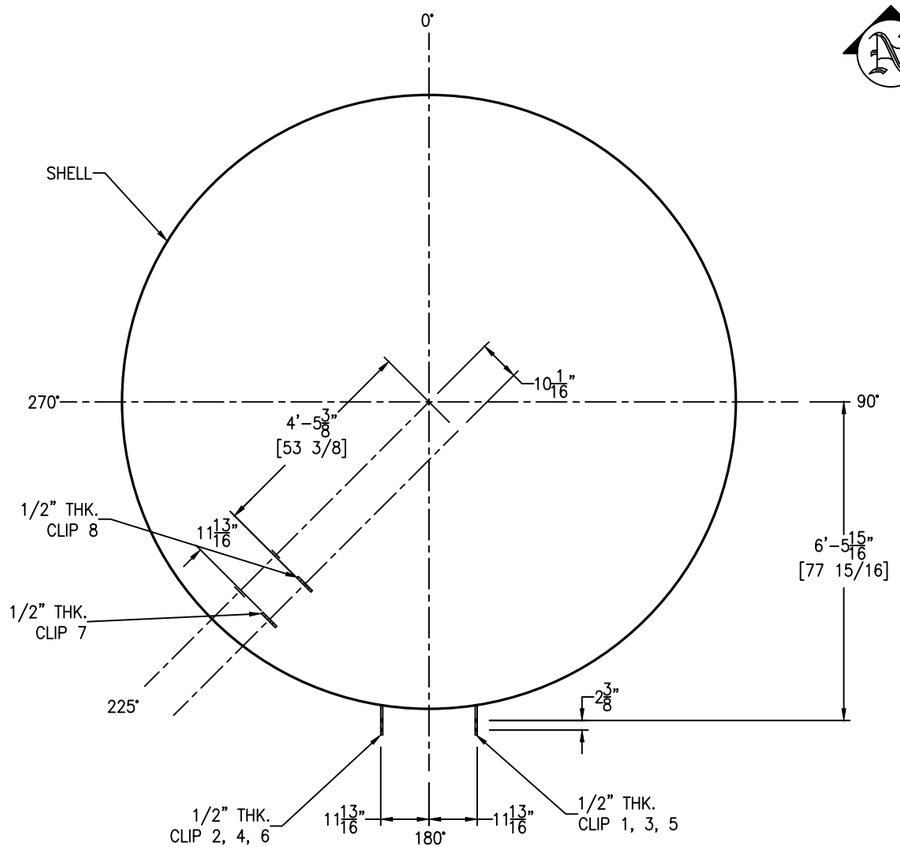

CLIPS DETAIL (ORIENTATION)

SCALE: 1/2" = 1'-0"

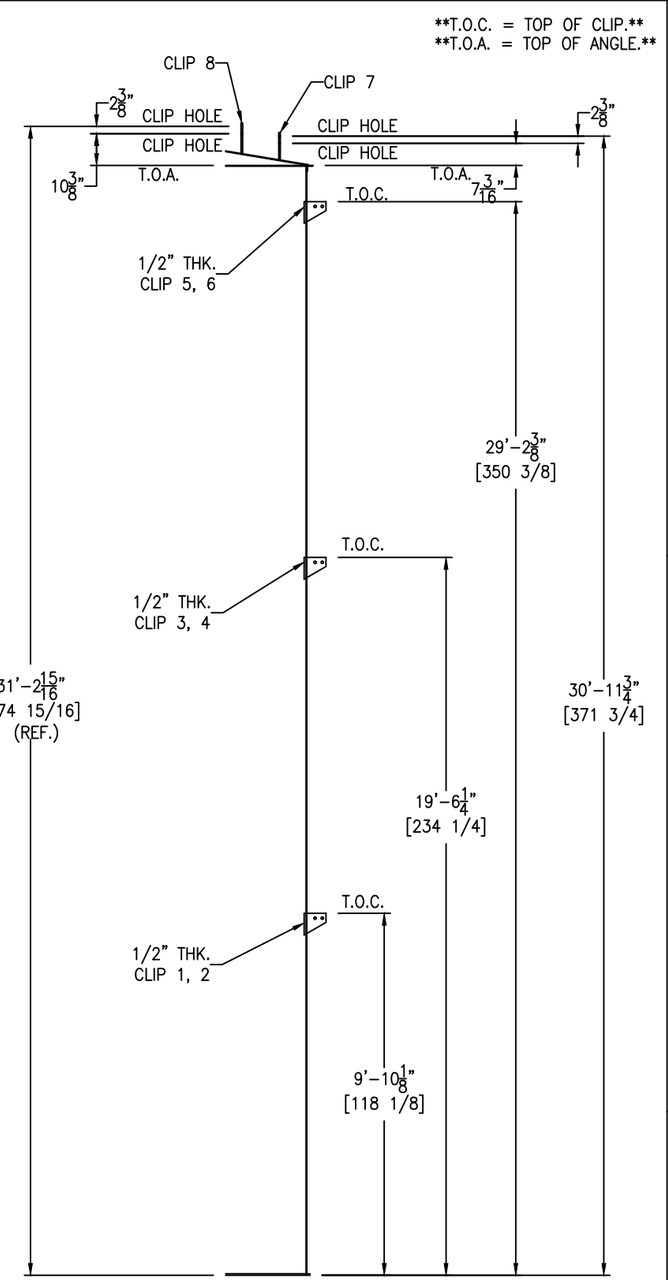

CLIPS DETAIL (ELEVATION)

SCALE: 3/8" = 1'-0"

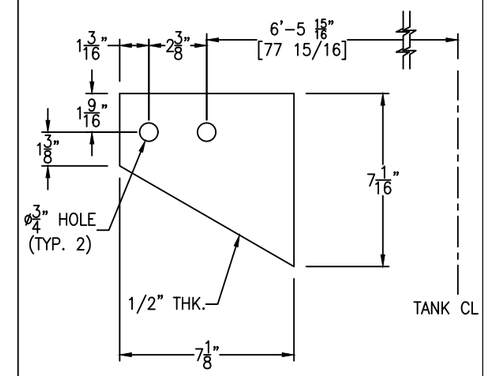

SHELL CLIPS DETAIL

(6 REQ'D) SCALE: 3" = 1'-0"

REV	D.BY	C.BY	DATE	DESCRIPTION
				AS BUILT
4	RS	–	8/14/25	CERTIFIED
3	AD	RS	8/6/25	APPROVAL REV 3
2	AD	RS	7/10/25	APPROVAL REV 2
1	AD	RS	5/9/25	APPROVAL REV 1
0	AD	RS	8/29/24	APPROVAL

⚠ REVISIONS

Savannah Tank & Equipment Corp.
1517 Telfair Road, Savannah, GA 31415
(912) 233-8902

DRAWN BY: AD
CHK'D BY: RS
APPROVED BY: NP
SCALE: 1/4" = 1'-0"

SYMS ENGINEERING
NMP STORAGE TANK
EQUIP. #TK-F502R
CUST. PO #MCD020813KE01

SHELL & ROOF CLIP DETAIL

DRAWING NO.: 046-24-6 SHT 6 OF 14 REV. SET 4

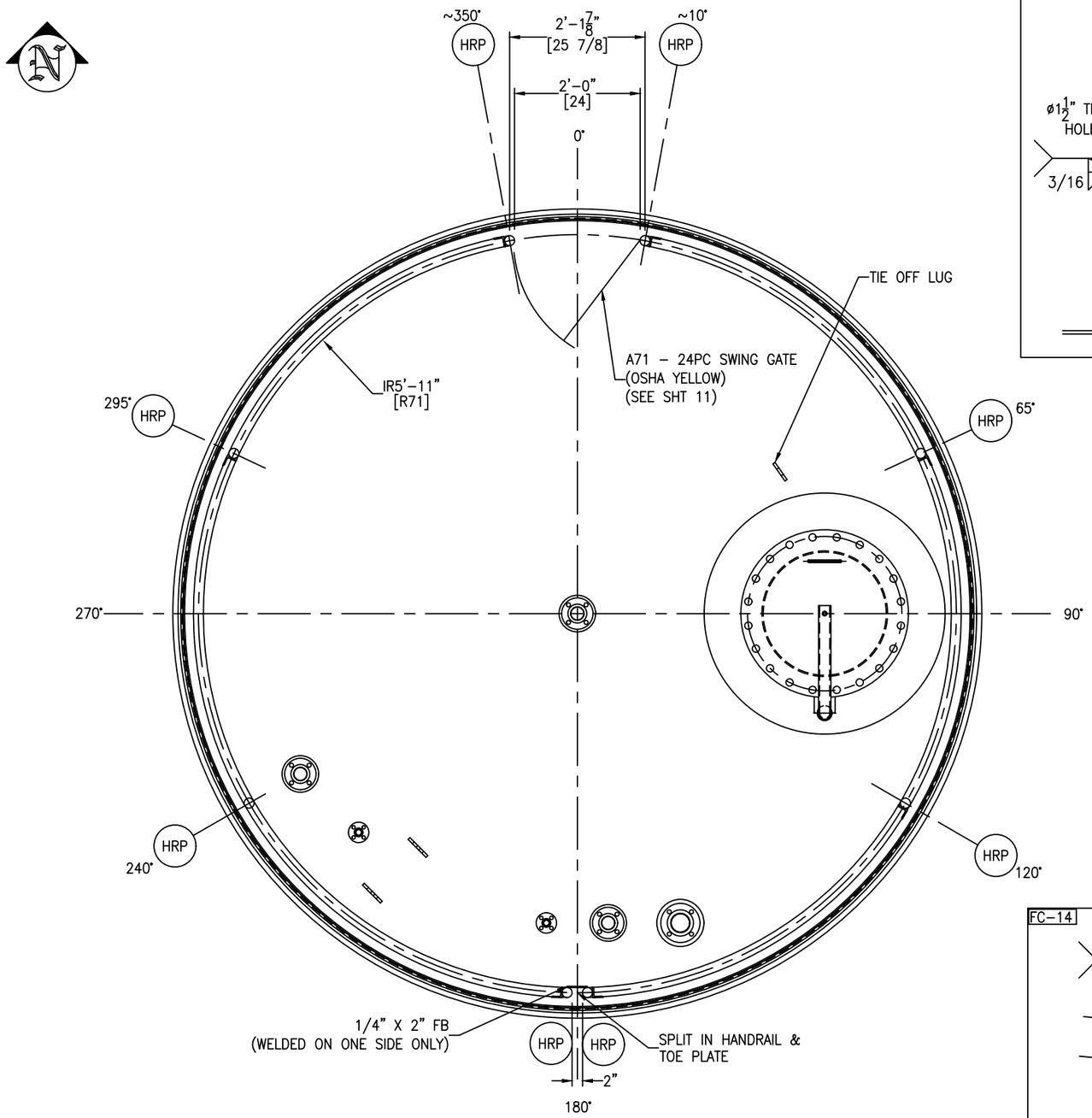

HANDRAIL DETAIL FOR TOP ROOF PORTION

SCALE: 3/4" = 1'-0"

FC-14

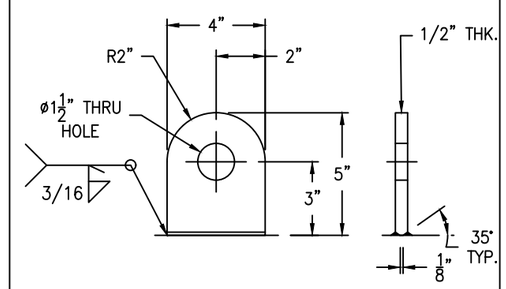

SHACKLE PIN DIA. = 3/4"

TIE OFF LUG DETAIL

SCALE: 3" = 1'-0"

FC-14

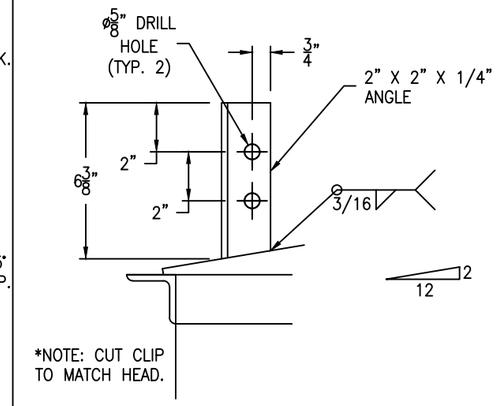

*NOTE: CUT CLIP
TO MATCH HEAD.

POST CLIP DETAIL

(8 REQ'D) SCALE: 3" = 1'-0"

FC-14

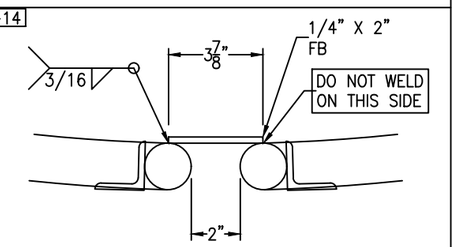

WELD ONLY ON ONE SIDE

SPLIT IN HANDRAIL DETAIL

SCALE: 3" = 1'-0"

GM-73

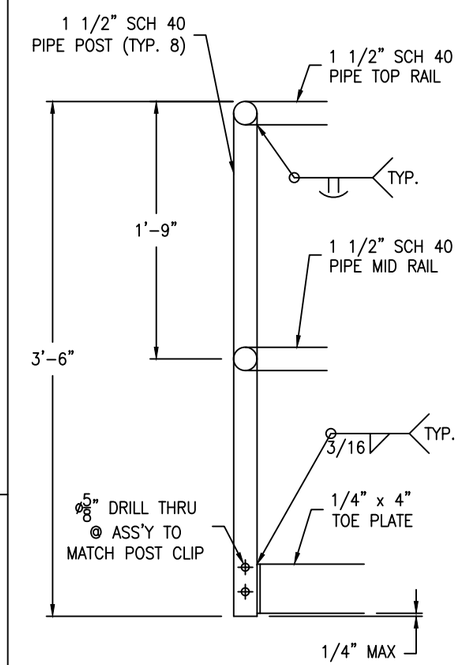

HANDRAIL DETAIL

SCALE: 1 1/2" = 1'-0"

HANDRAIL BOLTING:
(16) 1/2-13 NC X 3" HH BOLT – SA193-B8 (SS304)
(16) 1/2-13 NC HH NUT – SA194-8 (SS304)

HANDRAIL TO BE
PAINTED
OSHA YELLOW

REV	D.BY	C.BY	DATE	DESCRIPTION
				AS BUILT
4	RS	–	8/14/25	CERTIFIED
3	AD	–	8/6/25	APPROVAL REV 3
2	AD	RS	7/10/25	APPROVAL REV 2
1	AD	RS	5/9/25	APPROVAL REV 1
0	AD	RS	8/29/24	APPROVAL

⚠ REVISIONS

Savannah Tank & Equipment Corp.
1517 Telfair Road, Savannah, GA 31415
(912) 233-8902

DRAWN BY: AD
CHK'D BY: RS
APPROVED BY: NP
SCALE: 3/8" = 1'-0"

SYMS ENGINEERING
NMP STORAGE TANK
EQUIP. #TK-F502R
CUST. PO #MCD020813KE01

ROOF HANDRAIL DETAIL

DRAWING NO.: 046-24-7 SHT 7 OF 14 | REV. SET 4

LADDER CLIP BOLTING:
(8) 5/8–11 NC X 2" HH BOLT – SA193–B8 (SS304)
(8) 5/8–11 NC HH NUT – SA194–8 (SS304)

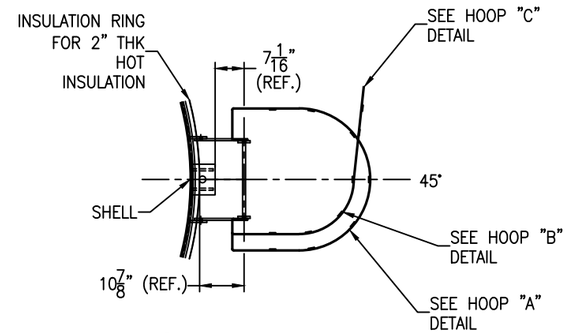

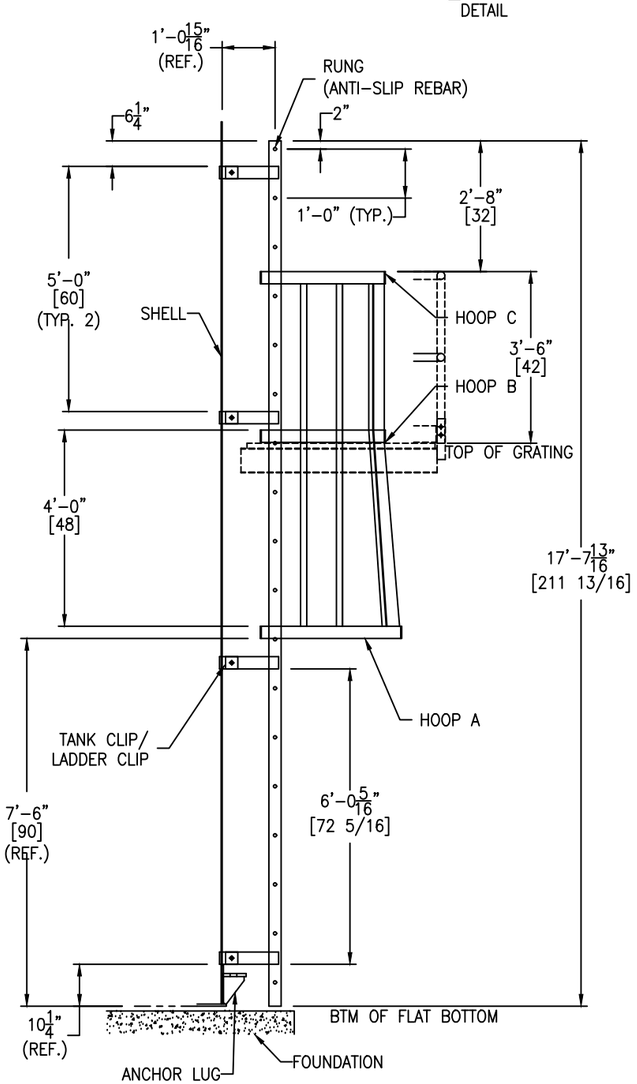

LOWER LADDER DETAIL
SCALE: 1/2" = 1'–0"

GM–73

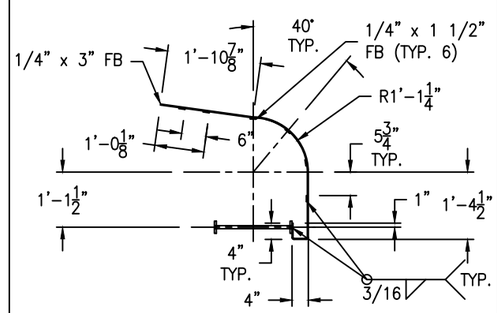

HOOP "C" DETAIL
(1 REQ'D) SCALE: 1/2" = 1'–0"

GM–73

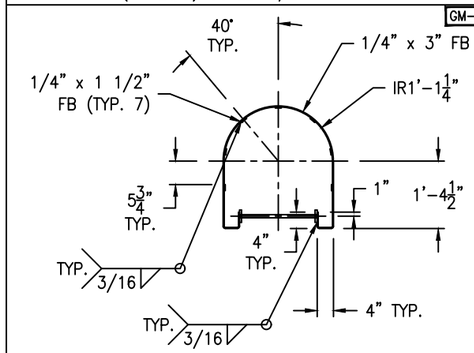

HOOP "B" DETAIL
(1 REQ'D) SCALE: 1/2" = 1'–0"

GM–73

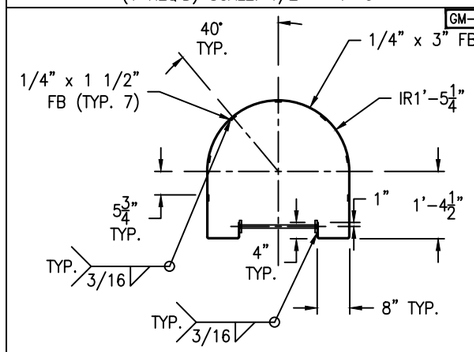

HOOP "A" DETAIL
(1 REQ'D) SCALE: 1/2" = 1'–0"

GM–73

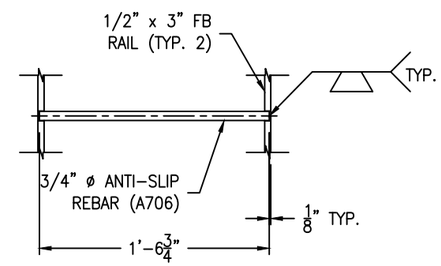

RUNG DETAIL
(18 REQ'D) SCALE: 1 1/2" = 1'–0"

FC–14

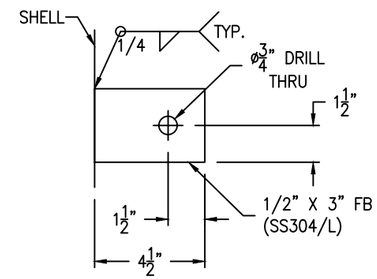

TANK CLIP DETAIL
(8 REQ'D) SCALE: 3" = 1'–0"

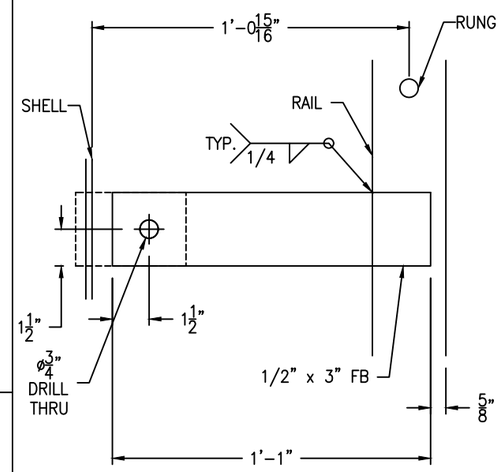

USE WELD. FC–14 FOR TANK CLIP

LADDER CLIP DETAIL
(8 REQ'D) SCALE: 3" = 1'–0"

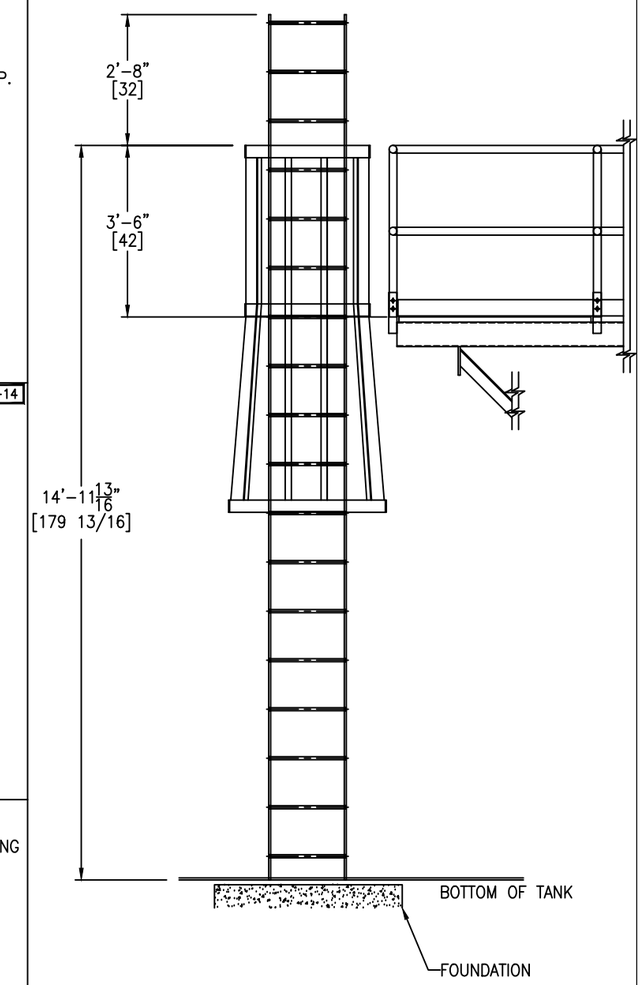

LOWER LADDER SETTING CONDITION
SCALE: 1/2" = 1'–0"

LADDER TO BE PAINTED OSHA YELLOW

REV	D.BY	C.BY	DATE	DESCRIPTION
				AS BUILT
4	RS	–	8/14/25	CERTIFIED
3	AD	RS	8/6/25	APPROVAL REV 3
2	AD	RS	7/10/25	APPROVAL REV 2
1	AD	RS	5/9/25	APPROVAL REV 1
0	AD	RS	8/29/24	APPROVAL

REVISIONS

Savannah Tank & Equipment Corp.
1517 Telfair Road, Savannah, GA 31415
(912) 233–8902

DRAWN BY: AD
CHK'D BY: RS
APPROVED BY: NP
SCALE: 1/4" = 1'–0"

SYMS ENGINEERING
NMP STORAGE TANK
EQUIP. #TK–F502R
CUST. PO #MCD020813KE01

LOWER LADDER DETAIL

DRAWING NO.: 046–24–8 SHT 8 OF 14 | REV. SET 4

LADDER CLIP BOLTING:
(10) 5/8-11 NC X 2" HH BOLT - SA193-B8 (SS304)
(10) 5/8-11 NC HH NUT - SA194-8 (SS304)

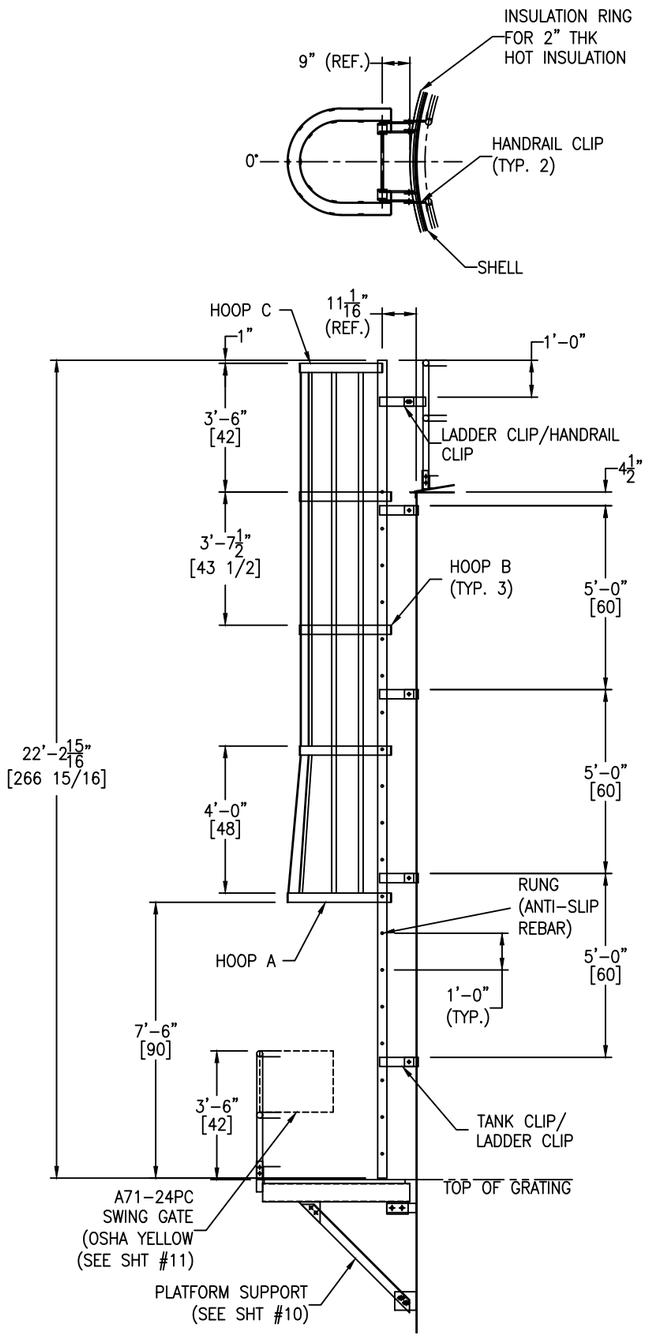

UPPER LADDER DETAIL
SCALE: 3/8" = 1'-0"

GM-73

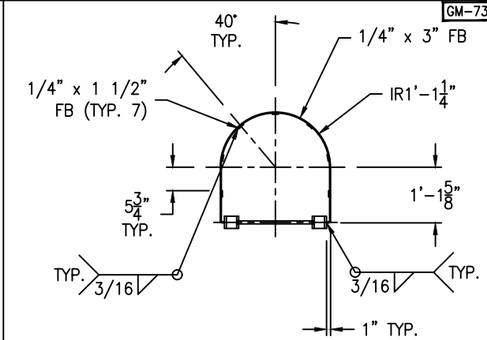

HOOP "C" DETAIL
(1 REQ'D) SCALE: 1/2" = 1'-0"

GM-73

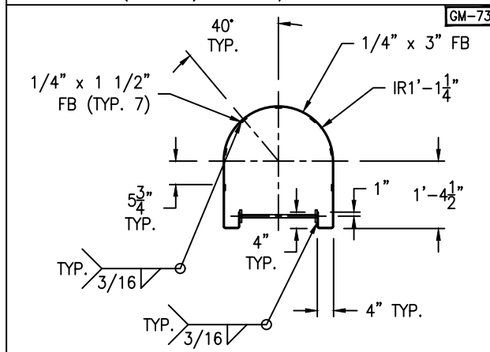

HOOP "B" DETAIL
(3 REQ'D) SCALE: 1/2" = 1'-0"

GM-73

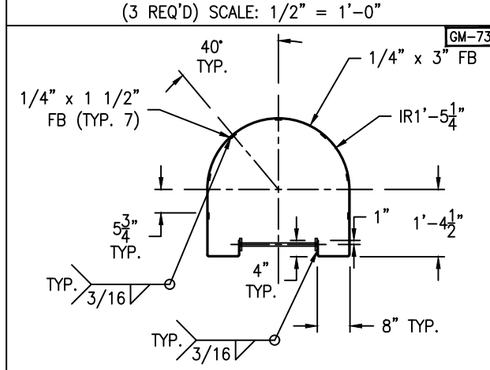

HOOP "A" DETAIL
(1 REQ'D) SCALE: 1/2" = 1'-0"

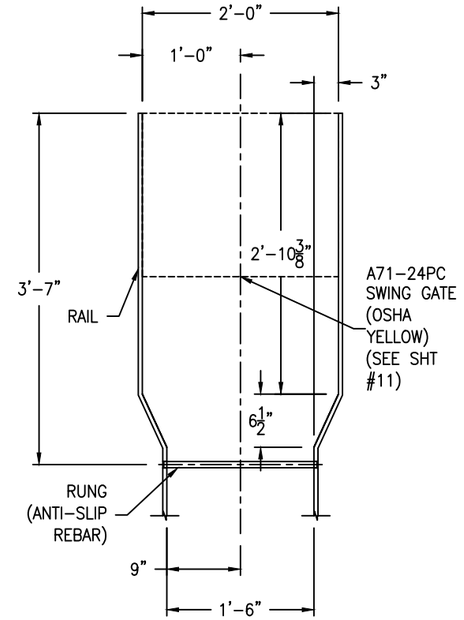

TOP PORTION WALK-THRU DETAIL
SCALE: 1" = 1'-0"

GM-73

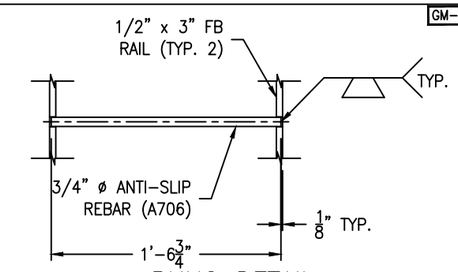

RUNG DETAIL
(19 REQ'D) SCALE: 1 1/2" = 1'-0"

GM-73

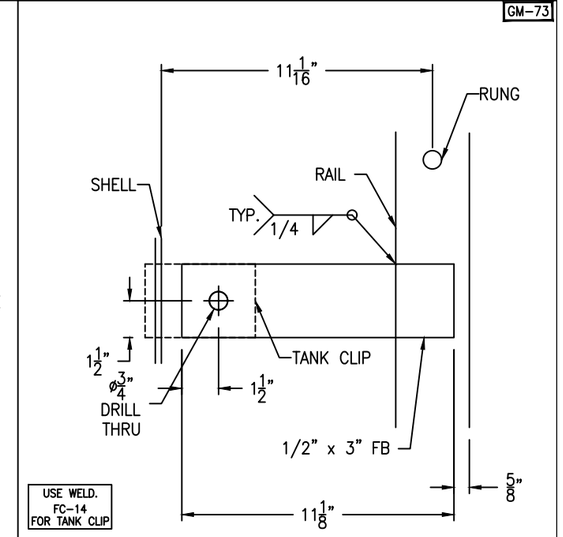

LADDER CLIP DETAIL
(10 REQ'D) SCALE: 3" = 1'-0"

FC-14

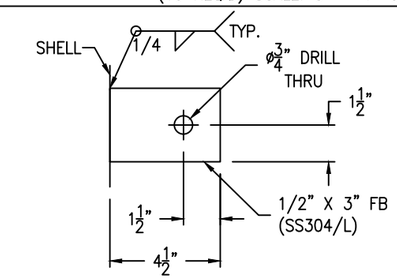

TANK CLIP DETAIL
(8 REQ'D) SCALE: 3" = 1'-0"

GM-73

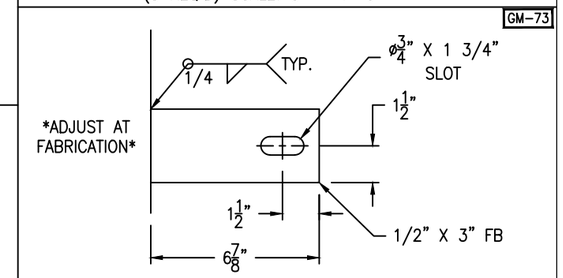

HANDRAIL CLIP DETAIL
(2 REQ'D) SCALE: 3" = 1'-0"

LADDER TO BE PAINTED OSHA YELLOW

REV	D.BY	C.BY	DATE	DESCRIPTION
				AS BUILT
4	RS	-	8/14/25	CERTIFIED
3	AD	RS	8/6/25	APPROVAL REV 3
2	AD	RS	7/10/25	APPROVAL REV 2
1	AD	RS	5/9/25	APPROVAL REV 1
0	AD	RS	8/29/24	APPROVAL

⚠ REVISIONS

Savannah Tank & Equipment Corp.
1517 Telfair Road, Savannah, GA 31415
(912) 233-8902

DRAWN BY: AD
CHK'D BY: RS
APPROVED BY: NP
SCALE: 1/4" = 1'-0"

SYMS ENGINEERING
NMP STORAGE TANK
EQUIP. #TK-F502R
CUST. PO #MCD020813KE01

UPPER LADDER DETAIL

DRAWING NO.: 046-24-9 SHT 9 OF 14 | REV. SET 4

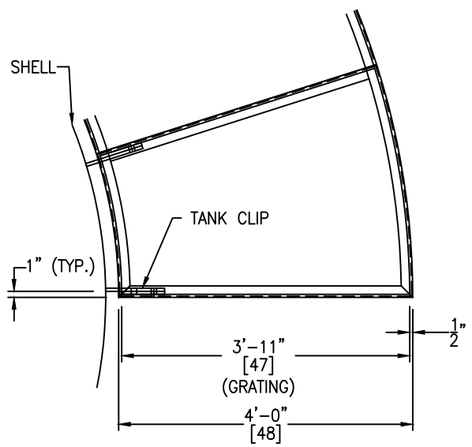

TYPICAL TANK CLIP FOR PLATFORM LAYOUT DETAIL

SCALE: 3/4" = 1'-0"

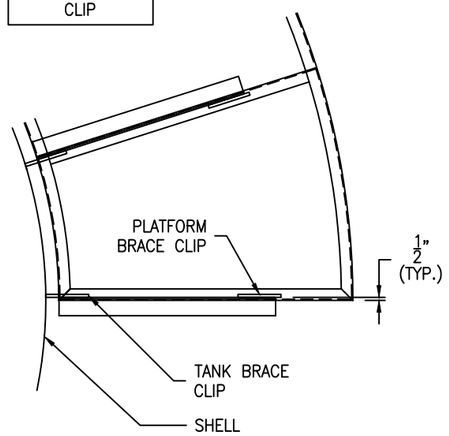

TYPICAL TANK BRACE CLIP & PLATFORM BRACE CLIP LAYOUT DETAIL

SCALE: 3/4" = 1'-0"

GM-73
FC-14

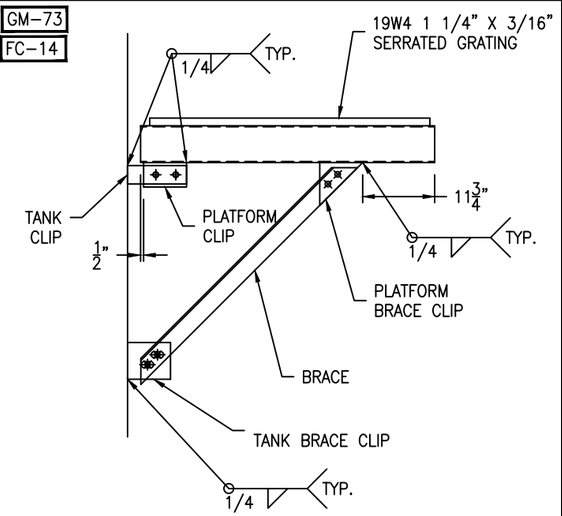

TYPICAL PLATFORM ELEVATION DETAIL

SCALE: 3/4" = 1'-0"

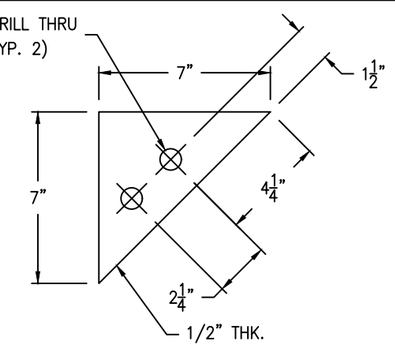

PLATFORM BRACE CLIP DETAIL

(4 REQ'D) SCALE: 3" = 1'-0"

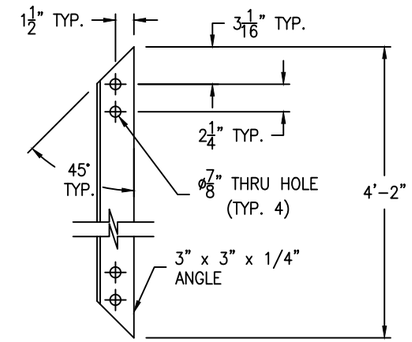

BRACE DETAIL

(4 REQ'D) SCALE: 1 1/2" = 1'-0"

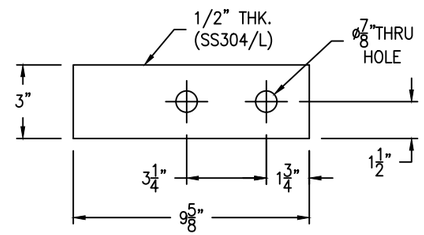

TANK CLIP DETAIL

(4 REQ'D) SCALE: 3" = 1'-0"

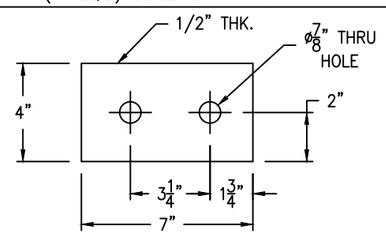

PLATFORM CLIP DETAIL

(4 REQ'D) SCALE: 3" = 1'-0"

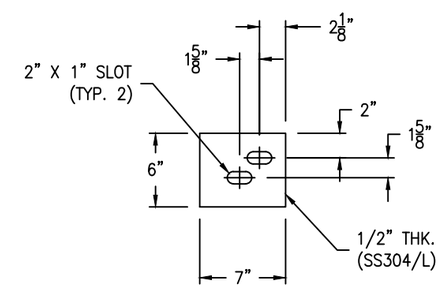

TANK BRACE CLIP DETAIL

(4 REQ'D) SCALE: 1 1/2" = 1'-0"

GM-73

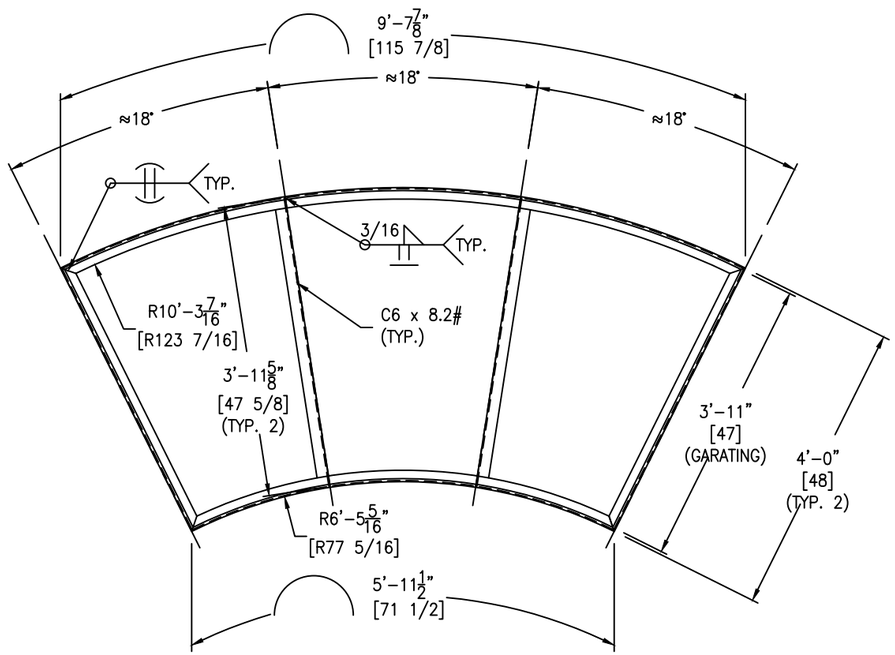

REST PLATFORM, FRAME& GRATING DETAIL

SCALE: 3/4" = 1'-0"

PLATFORM W/ C.S. PART CLIP
& GRATING TO
BE PAINTED
OSHA YELLOW

FRAME SUPPORT BOLTING:
(24) 3/4-10 NC X 2" HH BOLT - SA193-B8 (SS304)
(24) 3/4-10 NC HH NUT - SA194-8 (SS304)

REV	D.BY	C.BY	DATE	DESCRIPTION
				AS BUILT
4	RS	-	8/14/25	CERTIFIED
3	AD	RS	8/6/25	APPROVAL REV 3
2	AD	RS	7/10/25	APPROVAL REV 2
1	AD	RS	5/9/25	APPROVAL REV 1
0	AD	RS	8/29/24	APPROVAL

⚠ REVISIONS

Savannah Tank & Equipment Corp.
1517 Telfair Road, Savannah, GA 31415
(912) 233-8902

DRAWN BY: AD
CHK'D BY: RS
APPROVED BY: NP
SCALE: 3/8" = 1'-0"

SYMS ENGINEERING
NMP STORAGE TANK
EQUIP. #TK-F502R
CUST. PO #MCD020813KE01

REST PLATFORM DETAIL

DRAWING NO.: 046-24-10 SHT 10 OF 14 | REV. SET 4

A Series: Overview/Specs 4

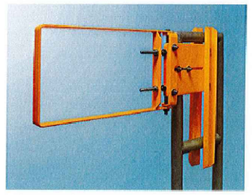

The Original Self-Closing Safety Gate

This series of FabEnCo Safety Gates is available in carbon steel, as well as aluminum and stainless steel for special applications/environments. FabEnCoat™ finishes include galvanized and environmentally-friendly safety yellow powder coated.

Easy to Install • Stainless Steel Spring
Positive Stop • Variety of FabEnCoat™ Finishes
Fits on All Handrails • Mounts Left or Right
12" Vertical Coverage • Clamp on Mount

A Series: Mounting Tips 5

The FabEnCo A Series Self-Closing Safety Gate can be easily installed in minutes on all types of handrails (angle, flatbar, pipe) or to existing walls. It can be mounted left or right, on either side of a handrail. The Safety Gate's stainless steel spring automatically closes the gate after each passage and adjustment bolts provide positive stop without handrail contact.

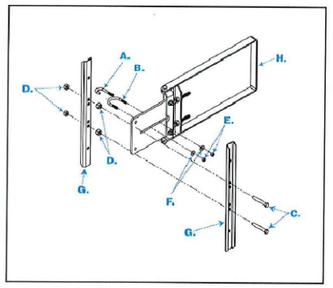

Hardware

Parts	Quantity
A. U-Bolt*	1
B. J-Bolt*	1
C. 1/2" Zinc-Plated Bolts	2
D. 1/2" Zinc-Plated Heavy Hex Nuts	4
E. 3/8" Zinc-Plated Heavy Hex Nuts	2
F. 3/8" Zinc-Plated Washers	2
G. Channels	2
H. Mounting Plate/Frame Assembly (with 2 adjustable stop bolts)	1

*Use U-Bolt for installation on pipes and J-Bolt for installation on angles. Can be mounted to 90 degrees.

Suggested Tools: Adjustable Wrench and Socket Set with 7/8" and 11/16" Sockets

Installation

Step 1: Insert the U-Bolt (or J-Bolt) through the slot in the Mounting Plate/Frame Assembly. Fasten to the handrail with the 3/8" Washers and 3/8" Nuts.

Step 2: Insert the 1/2" Bolts through the set of holes (at the desired level) on one Channel, then through the Mounting Plate/Frame Assembly. Fasten the 1/2" Nuts onto the 1/2" Bolts and tighten flush against the Mounting Plate/Frame Assembly to stabilize.

Step 3: Place the second Channel on the other side of the handrail and tighten with the remaining 1/2" Nuts.

SWING GATE INFO

SCALE: N/A

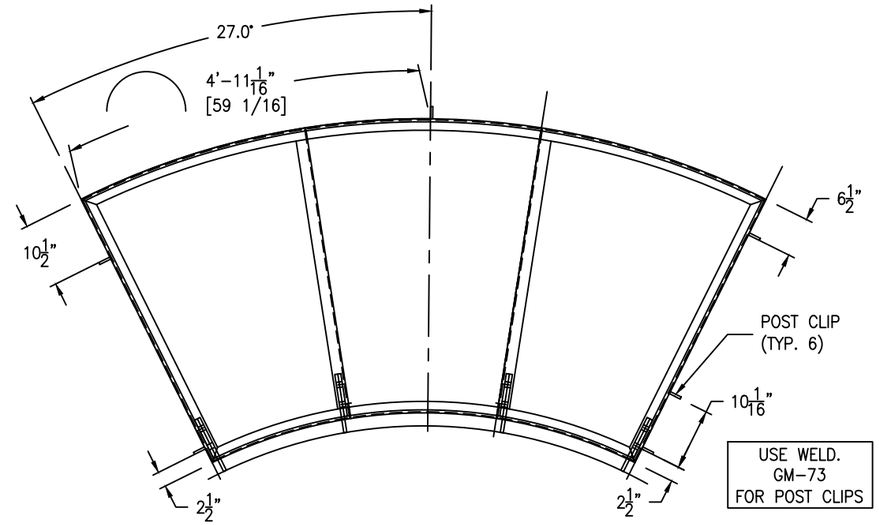

POST CLIP LAYOUT DETAIL

SCALE: 3/4" = 1'-0"

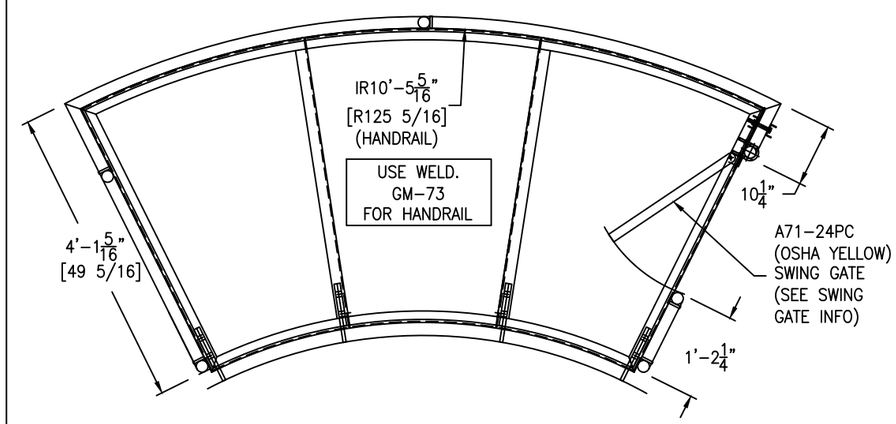

HANDRAIL (REST PLATFORM) DETAIL

SCALE: 3/4" = 1'-0"

GM-73

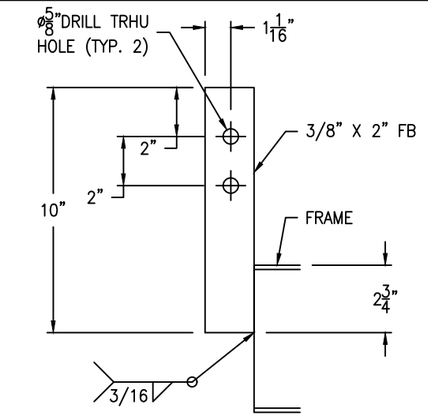

POST CLIP DETAIL

(6 REQ'D) SCALE: 3" = 1'-0"

GM-73

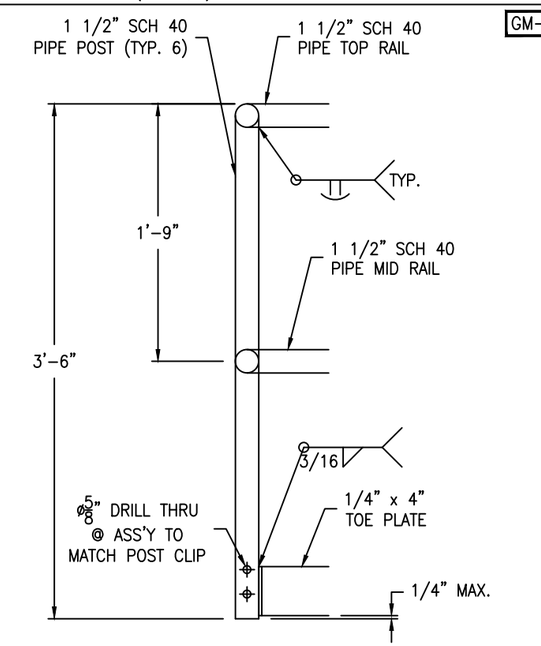

*NOTE: DRILL HOLES IN RAILS AND POSTS IF HOT DIPPED GALVANIZED.

HANDRAIL DETAIL

SCALE: 1 1/2" = 1'-0"

HANDRAIL BOLTING:
(12) 1/2-13 NC X 3" HH BOLT - SA193-B8 (SS304)
(12) 1/2-13 NC HH NUT - SA194-8 (SS304)

HANDRAIL TO BE PAINTED OSHA YELLOW

REV	D.BY	C.BY	DATE	DESCRIPTION
				AS BUILT
4	RS	-	8/14/25	CERTIFIED
3	AD	RS	8/6/25	APPROVAL REV 3
2	AD	RS	7/10/25	APPROVAL REV 2
1	AD	RS	5/9/25	APPROVAL REV 1
0	AD	RS	8/29/24	APPROVAL

⚠ REVISIONS

Savannah Tank & Equipment Corp.
1517 Telfair Road, Savannah, GA 31415
(912) 233-8902

DRAWN BY: AD
CHK'D BY: RS
APPROVED BY: NP
SCALE: 3/8" = 1'-0"

SYMS ENGINEERING
NMP STORAGE TANK
EQUIP. #TK-F502R
CUST. PO #MCD020813KE01

REST PLATFORM HANDRAIL DETAIL

DRAWING NO.: 046-24-11 SHT 11 OF 14 REV. SET 4

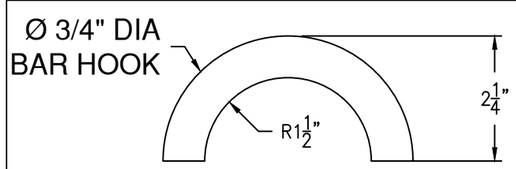

HOOK DETAIL

(1 REQ'D) SCALE: 6" = 1'-0"

FC-14

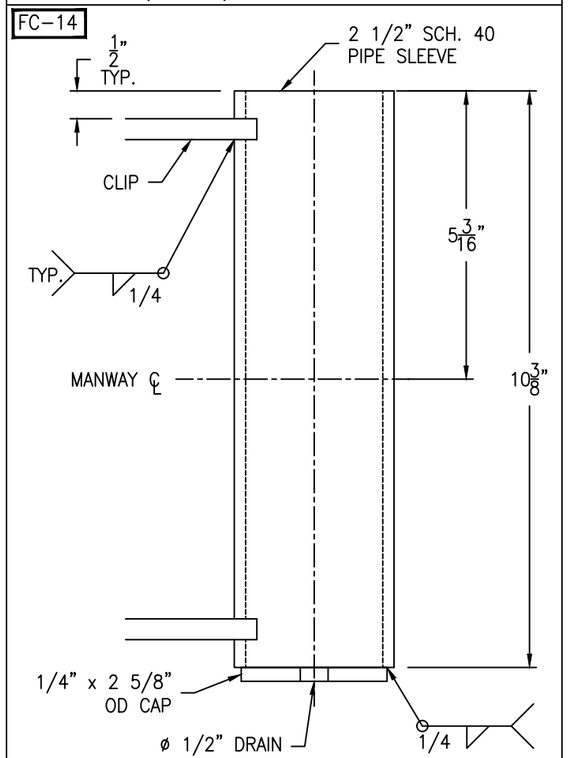

SLEEVE DETAIL

(1 REQ'D) SCALE: 6" = 1'-0"

FC-14

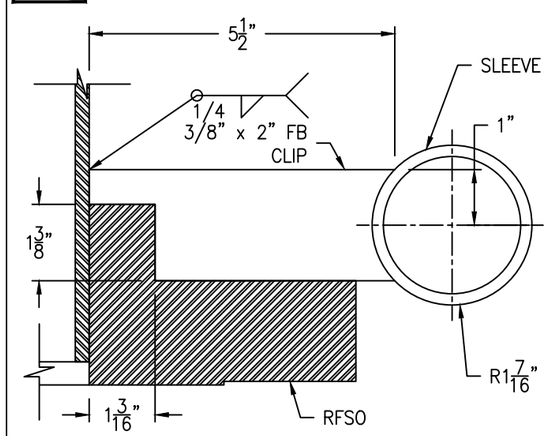

CLIP DETAIL (PLAN VIEW)

(2 REQ'D) SCALE: 6" = 1'-0"

FC-14

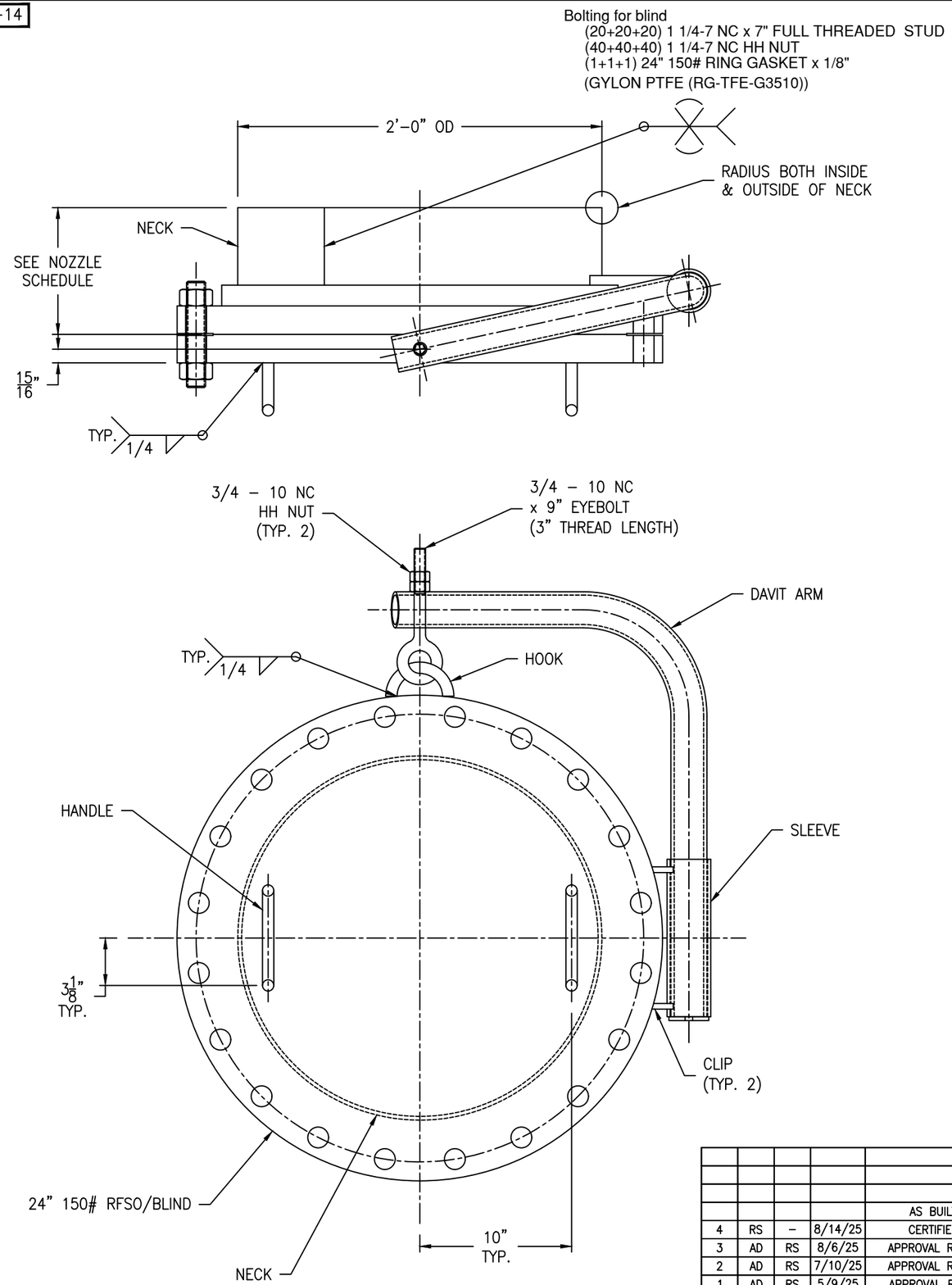

24" DAVIT MANWAY (LOWER PORTION)

SCALE: 2" = 1'-0"

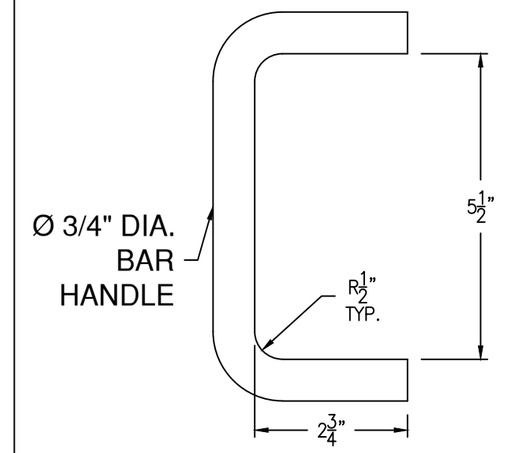

HANDLE DETAIL

(2 REQ'D) SCALE: 6" = 1'-0"

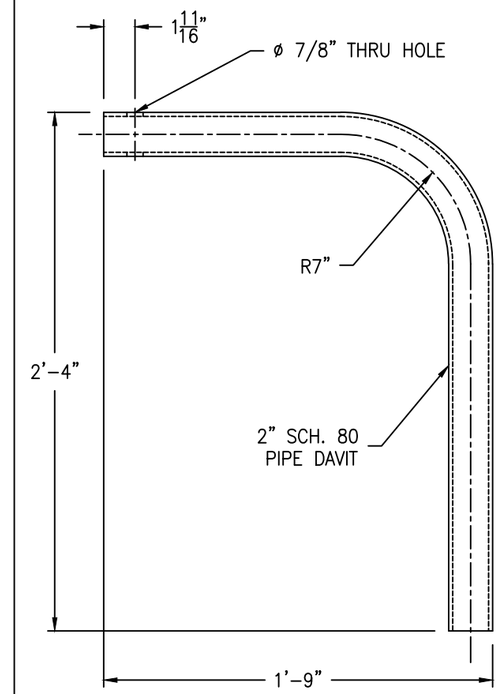

DAVIT ARM DETAIL

(1 REQ'D) SCALE: 2" = 1'-0"

REV	D.BY	C.BY	DATE	DESCRIPTION
				AS BUILT
4	RS	–	8/14/25	CERTIFIED
3	AD	RS	8/6/25	APPROVAL REV 3
2	AD	RS	7/10/25	APPROVAL REV 2
1	AD	RS	5/9/25	APPROVAL REV 1
0	AD	RS	8/29/24	APPROVAL

⚠ REVISIONS

Savannah Tank & Equipment Corp.
1517 Telfair Road, Savannah, GA 31415
(912) 233-8902

DRAWN BY:	AD
CHK'D BY:	RS
APPROVED BY:	NP
SCALE:	2" = 1'-0"
DRAWING NO.:	046-24-12 SHT 12 OF 14

SYMS ENGINEERING
NMP STORAGE TANK
EQUIP. #TK-F502R
CUST. PO #MCD020813KE01

LOWER PORTION 24" MANWAY DETAIL

REV. SET 4

FC-14

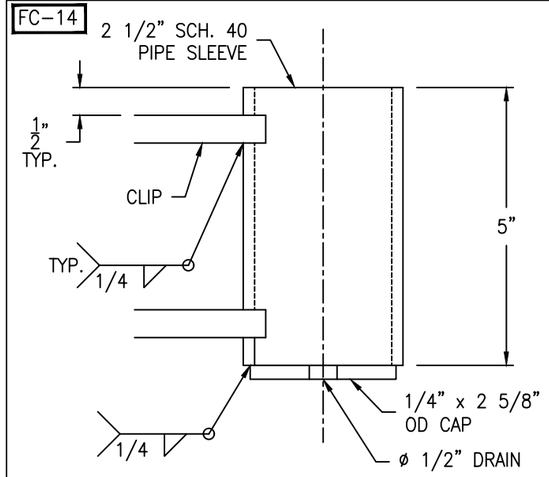

SLEEVE DETAIL

(1 REQ'D) SCALE: 6" = 1'-0"

FC-14

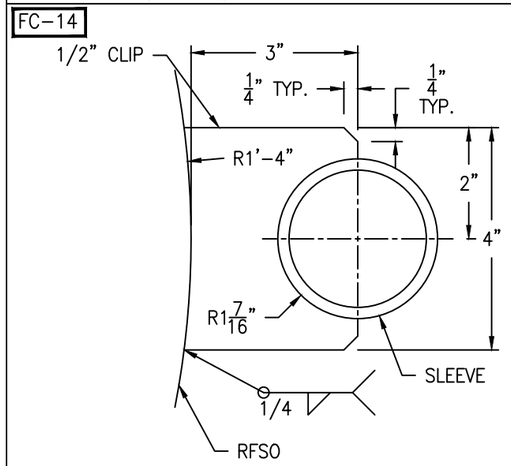

UPPER CLIP DETAIL

(1 REQ'D) SCALE: 6" = 1'-0"

FC-14

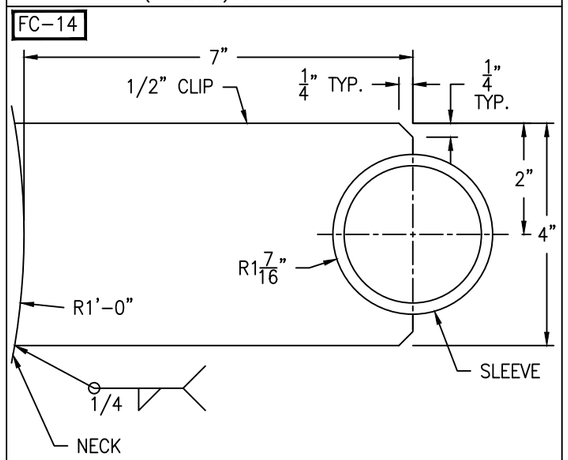

LOWER CLIP DETAIL

(1 REQ'D) SCALE: 6" = 1'-0"

FC-14

Bolting for blind
(20+20+20) 1 1/4-7 NC x 7" FULL THREADED STUD
(40+40+40) 1 1/4-7 NC HH NUT
(1+1+1) 24" 150# RING GASKET x 1/8"
(GYLON PTFE (RG-TFE-G3510))

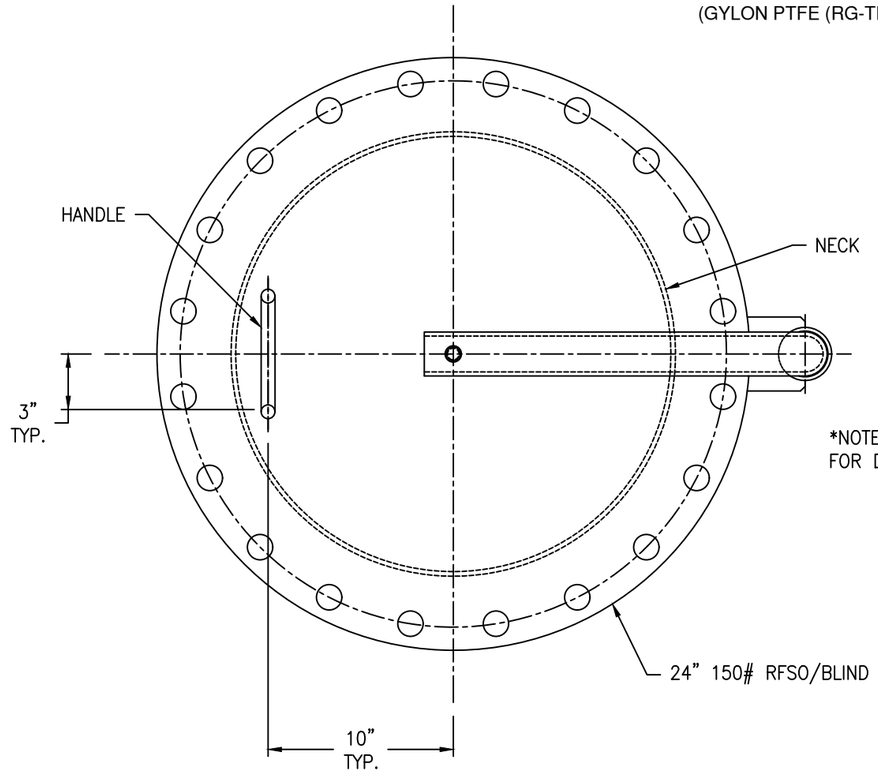

*NOTE: SEE VESSEL ORIENTATION FOR DAVIT LOCATION

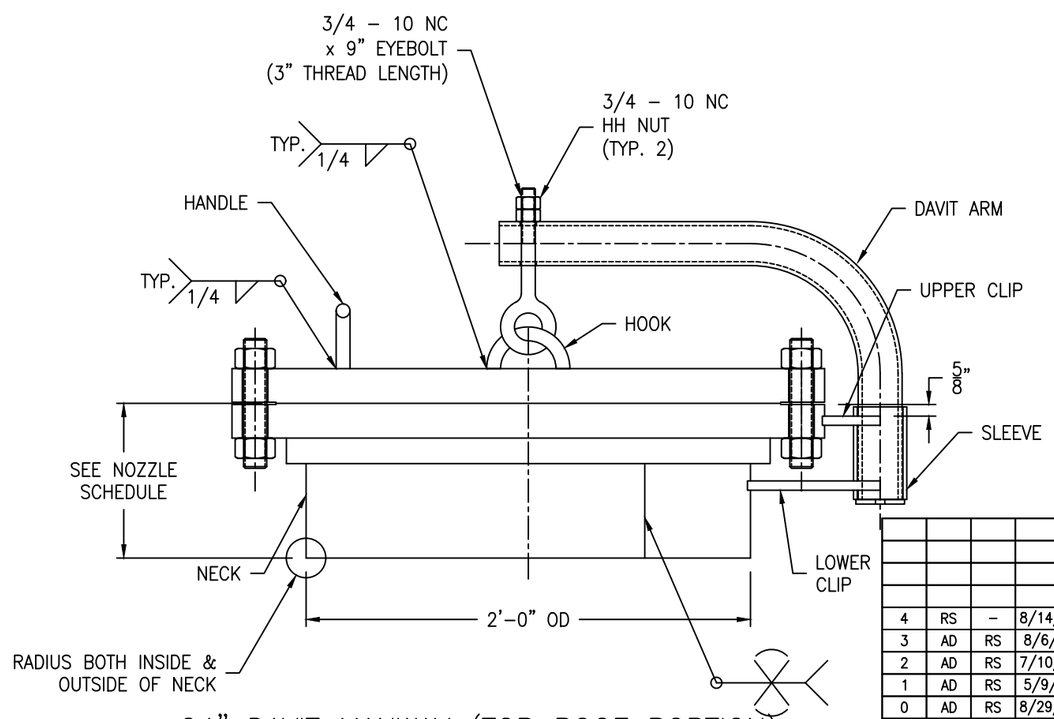

24" DAVIT MANWAY (TOP ROOF PORTION)

SCALE: 2" = 1'-0"

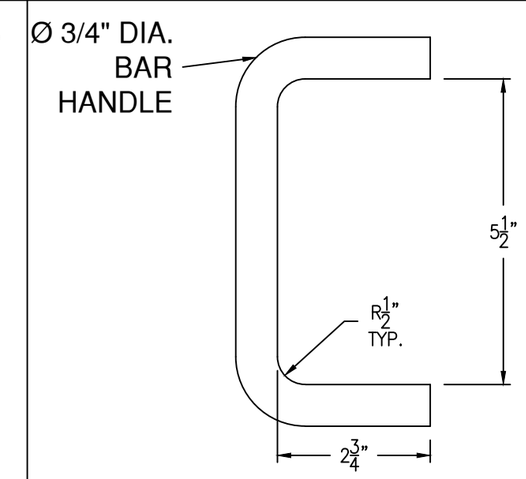

HANDLE DETAIL

(1 REQ'D) SCALE: 6" = 1'-0"

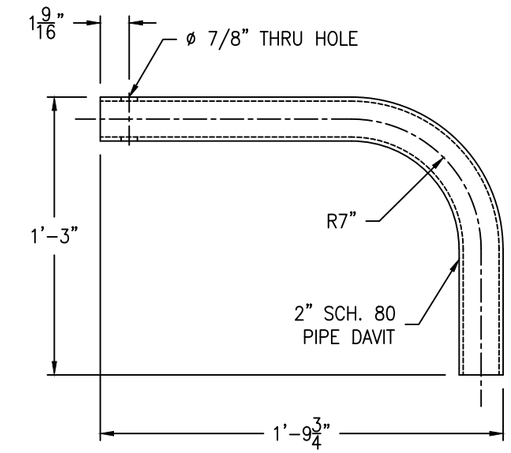

DAVIT ARM DETAIL

(1 REQ'D) SCALE: 2" = 1'-0"

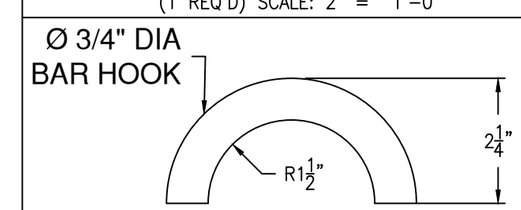

HOOK DETAIL

(1 REQ'D) SCALE: 6" = 1'-0"

REV	D.BY	C.BY	DATE	DESCRIPTION
				AS BUILT
4	RS	–	8/14/25	CERTIFIED
3	AD	RS	8/6/25	APPROVAL REV 3
2	AD	RS	7/10/25	APPROVAL REV 2
1	AD	RS	5/9/25	APPROVAL REV 1
0	AD	RS	8/29/24	APPROVAL

1 REVISIONS

Savannah Tank & Equipment Corp.
1517 Telfair Road, Savannah, GA 31415
(912) 233-8902

DRAWN BY: AD
CHK'D BY: RS
APPROVED BY: NP
SCALE: 2" = 1'-0"

SYMS ENGINEERING
NMP STORAGE TANK
EQUIP. #TK-F502R
CUST. PO #MCD020813KE01

TOP ROOF PORTION 24" MANWAY DETAIL

DRAWING NO.: 046-24-13 SHT 13 OF 14 | REV. SET 4

LONG SEAMS

SHELL	ORIENTATION	ORIENTATION
1(TOP)	115°	295°
2	110°	290°
3	115°	295°
4	110°	290°
5	115°	295°
6	110°	290°

*VERT – TOP TO BOTTOM

FC-14 SA-30

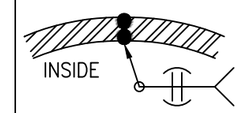

SHELL THK. < 5/16"

FIGURE NO. 9

NOTE FOR WELDING:
REFER TO FOLLOWING WPS NO. & DOCUMENT
WPS ST-FC-14: FCAW (SEMI-AUTOMATIC)
WPS ST-GT-11: GTAW (MANUAL)
WPS ST-SA-30: SAW (MACHINE)

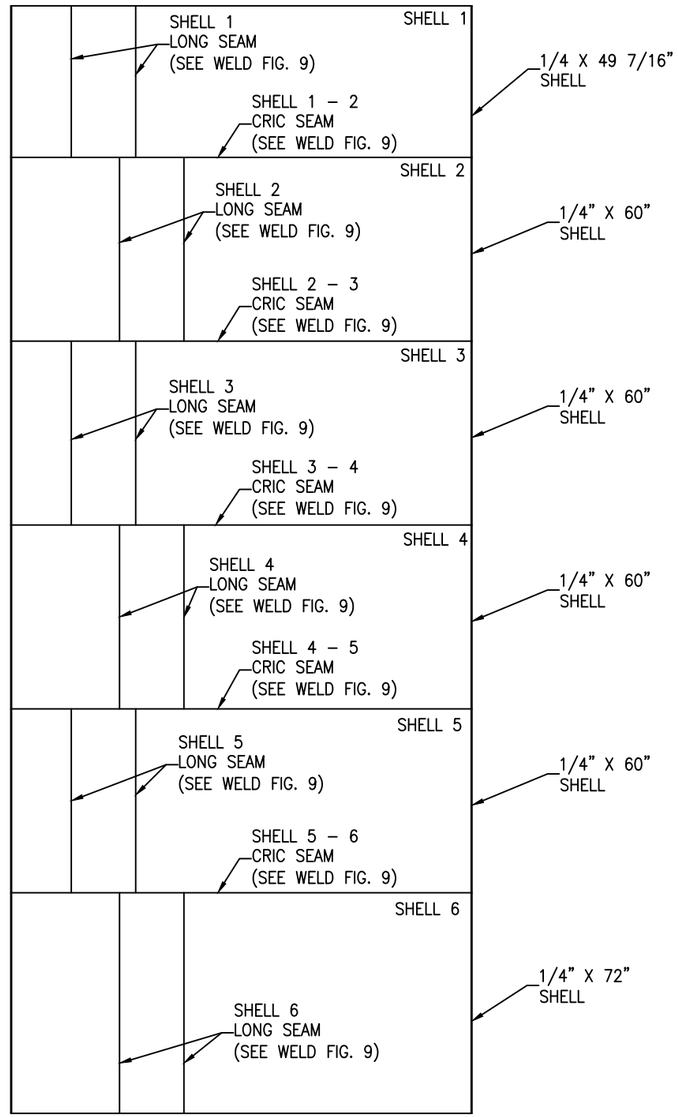

TANK ELEVATION VIEW

SCALE: 3/8" = 1'-0"

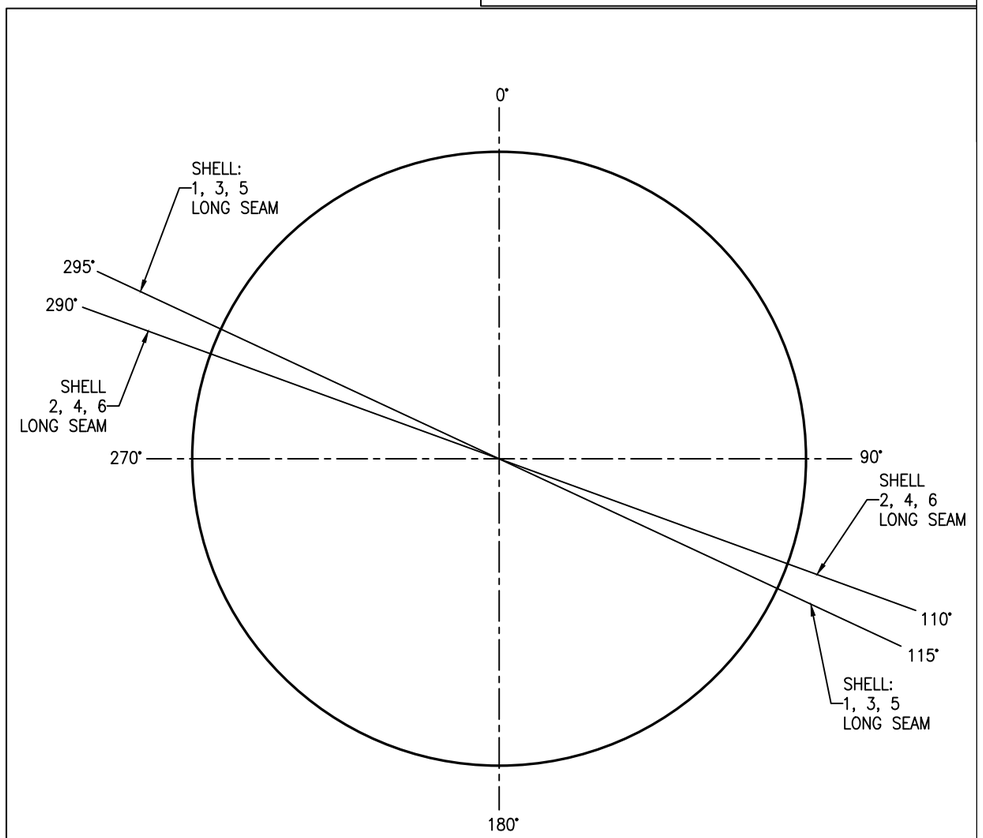

TANK PLAN VIEW

SCALE: 1/2" = 1'-0"

REV	D.BY	C.BY	DATE	DESCRIPTION
				AS BUILT
4	RS	–	8/14/25	CERTIFIED
3	AD	RS	8/6/25	APPROVAL REV 3
2	AD	RS	7/10/25	APPROVAL REV 2
1	–	–	–	APPROVAL REV 1
0	–	–	–	APPROVAL

REVISIONS

Savannah Tank & Equipment Corp.
1517 Telfair Road, Savannah, GA 31415
(912) 233-8902

DRAWN BY: AD
CHK'D BY: RS
APPROVED BY: NP
SCALE: 1/4" = 1'-0"

SYMS ENGINEERING
NMP STORAGE TANK
EQUIP. #TK-F502R
CUST. PO #MCD020813KE01

SHELL WELD SEAMS

DRAWING NO.: 046-24-1 SHT 14 OF 14

REV. SET 4